YELLOW BOX®

THREADED FIBERGLASS LINE PIPE
GENERAL INSTALLATION MANUAL

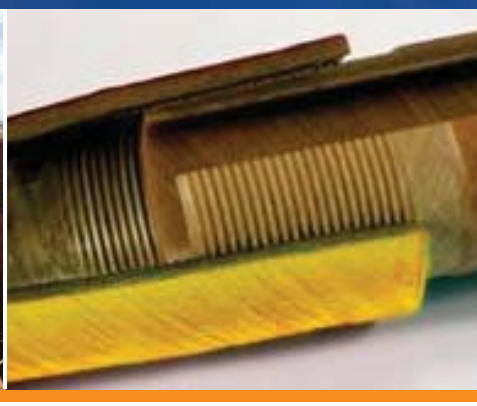

FUTURE PIPE INDUSTRIES

Complete Pipe System Solutions

YELLOW BOX®

THREADED FIBERGLASS LINE PIPE
GENERAL INSTALLATION MANUAL

DOC. HP-TCD-001 Rev.0 20111003
Issue Date: 3rd October 2011

This guide is specifically for Future Pipe Industries' (FPI's) medium and high pressure line pipe with threaded end connections.

As this pipe may contain corrosive fluids and/or operate at a high pressure level, the instructions in this manual must be followed to avoid serious personal injury or property damage.

Improper installation can cause injury or damage. Installation contractors should read and follow all cautions and warnings to avoid personal injury. They should also: observe the general safety practices with all the tools to avoid personal injury, wear protective clothing when necessary and pay particular attention to section # 7 in this guide on testing.

We highly recommend that all installation contractors be trained by FPI before installing our fiberglass line pipe. For current information on field training, installation training seminars or FPI's Field Service, please contact us.

It is the policy of FPI to improve its products continually. In accordance with this policy, FPI reserves the right to make changes in specifications, descriptions, and illustrative material contained in this manual as the conditions warrant. The information contained herein is general in nature and does not intend to express any warranty of any type whatsoever nor shall any be implied.

This is a dynamic, live and in-process document which can be revised at any time by FPI based on the recommendations of stress analysis of a given pipe system, changes in products or improvements in installation techniques.

We accept no responsibility for the interpretation of statements made.

YELLOW BOX® Field Services Provided by Future Pipe Industries:

FPI recommends that customers who do not have extensive experience with the installation of threaded fiberglass products utilize the services of our field service technicians. Services provided range from making available an experienced fiberglass technician to providing advice and/or assistance with the on-site installation. In some locations, FPI can provide the appropriate equipment, crew and supplies required to string, makeup and test a fiberglass line pipe installation.

Note that the services provided do not include earthwork, excavation, construction, design or any activities not specifically related to the assembly and makeup of the fiberglass products provided by FPI. Typical services provided by FPI for line pipe installations are given below. Due to logistical constraints not all of these services are available in all locations.

Line Pipe Services:

FPI services and equipment available for the installation of fiberglass line pipe and fittings include the following:

1. Hands-on supervision and assistance in the unloading, storing, handling and stringing of pipe along the pipeline right of way.
2. Expertise and recommendations about the trench condition, bedding, backfill and general configuration of the pipeline, manifold or other fiberglass installation.
3. Supervision and participation in the makeup of the fiberglass pipe and fittings.
4. Supervision and participation in the hydro-test of the completed pipeline.
5. Cleaning and inspection of used fiberglass pipe and fittings.
6. Provide the appropriate hydraulic tong for the makeup of larger diameter fiberglass pipe.
7. Provide a torque monitoring, computerized load cell to measure the makeup torque on the fiberglass connection.
8. Provide strap wrenches, pipe jacks or stands, pipe cradles and other miscellaneous tools required for the makeup procedure.
9. Furnish a crew to perform the stringing, makeup and testing of the fiberglass pipeline.
10. Provide a pickup truck, stringing trailer and test headers.
11. Provide pressure test equipment including a pump truck, water and the related connection equipment required to test the pipeline.

FPI field personnel have extensive experience in the installation of fiberglass products in numerous applications. Typically they can be of assistance in many aspects of a fiberglass project, only some of which are listed above. Their responsibilities, however, do not include the success or failure of a given project. Their authority on a customer's work site is restricted to advice and recommendations provided to the customer and its employees. Field installation services are not available for products not manufactured by FPI.

TABLE OF CONTENTS

1 PACKING, STORAGE & HANDLING

1.1 Packing

Pipe is shipped in 30 ft. standard lengths complete with thread protectors. Length is determined by measuring the full, overall length of the joint including the threads. For determining the joint length, the length of thread must be deducted from the overall length.

YELLOW BOX® products up to 6″ are shipped from the plant packaged in crates with wooden supports and reinforced with steel bands. The pipe is encircled with 2″ x 4″ wooden boards in four places for support and protection (Figure 1). Standard crates are 48″ wide, 21″ tall and about 32′ long. Individual crates weigh from 1,600 to 2,250 kg. An estimate on the number of joints per crate is given in Table 1. Typically, eight crates can be loaded on a standard flatbed trailer.

Pipe larger than 6″ size is loaded directly on a trailer or inside a container. Joints are separated and secured by means of wooden spacers, stoppers and straps (Figure 2).

1.2 Inspection

Upon arrival of a shipment, each pipe must be inspected. Check to see if the load has shifted, or shows signs of unusual or rough handling. Unless rough handling is evident, usually only a normal visual inspection is sufficient. A shifted load or other signs of rough treatment are cause for careful inspection of each joint. Look for light, discolored spots on the outside of the pipe resulting from impact or mechanical damage. Check pipe ends for damage, especially when the material is transported on a common carrier.

Damaged or missing items should be marked on the delivery receipt. Notify the carrier's agent immediately and leave the material as received for their inspection. Replacements for shortages and damaged materials are not automatically reshipped. Replacement materials must be ordered in the normal manner. Also check the bill of lading to assure accountability of all items.

1.3 Transportation, Storage & Handling

1.3.1 Pipe

1. Ensure the pipe ends are always protected with thread protectors.
2. Pin end thread protectors shall cover the full length of the thread.
3. Box end thread protectors shall cover at least the first 65 mm from the face of the box for LTC type of thread, or at least the first 50 mm from the face of the box for 8-Round EUE Long form type of thread.
4. Ensure that the trailer bed is free from nails and sharp objects. Protect pipe against point loading or impact damage at all times.
5. Pipe shall be loaded on the trailer in layers with each pipe's coupling or box ends staggered ½ to 1 meter to allow maximum joints per layer.
6. Stack height shall not exceed 2.1 meters for standard pipe for safety purposes. Never let pipe extend beyond the end of the trailer. See Figure 2.
7. While in transit, strap the pipe to the trailer using pliable straps or nylon ropes directly over the flat, cross boards. Never use steel cables or chains for securing RTR material.
8. Crated pipe should be stripped with four 2″ x 4″ wooden boards across the top of each frame in the crate. These stripping pieces can be nailed to the top piece of each crate.
9. Do not drop or bump the pipe from any height while loading, unloading and handling. Pay particular attention to avoid any impact to pin and box ends.
10. Loading and unloading by a fork lift is preferred. See Picture 1. While loading and unloading, ensure that the forks are protected with rubber pads to avoid direct contact with RTR pipe to prevent damage.

11. A forklift can lift several joints at a time, depending on the forklift capacity and the pipe size.
12. Side posts of trailers must be wrapped with rubber sheets to avoid contact of RTR with steel. To provide adequate protection, side posts shall always be higher than the load.
13. While loading and offloading by crane, single joints must be lifted using a spreader bar with pliable nylon straps or nylon ropes. Lift with two support points placed at equal distance from the pipe ends so the pipe is balanced.
14. Ensure the storage surface is clear, levelled, firm and free from rocks or any other sharp objects.
15. Pipe should be stored separately according to pressure class and diameter.
16. During storage, pipe shall be uniformly supported throughout the pipe length at all times by flat, cross boards placed under each pipe layer with spacing not greater than 2 meters. The wooden supports shall cover the length of the entire pipe until a maximum of 1 meter from the ends (Picture 2). Wooden wedges are used to prevent the stored pipe from sliding. Wedges should be placed on both sides of the stack on the cross timbers, as shown in Picture 2.
17. If RTR products will be stored for long periods (6 – 12 months) or subjected to high temperatures, they must be covered with tarpaulins or white polyethylene sheeting.
18. Small diameter pipe can be stacked in the same crate as shipped (Figure 1).
19. It is important to note that **YELLOW BOX®** threads (both male and female) shall not be subjected to direct Ultraviolet (UV) rays. Exposure to UV rays from the sun for an extended period of time causes thread disintegration. Hence it is vital to cover them using the FPI-supplied thread protectors. In case no thread protectors are available at site, cover the threads temporarily using dark tarpaulin sheet, and arrange for replacements. The pipe surface is resistant to UV rays – see section # 2.3.

1.3.2 Fittings

1. Fittings are normally disspatched pre-packed in wooden boxes (Figure 3). All fittings in the box are separated by corrugated sheet to prevent damage. It is recommended to store fittings in the same box until they are required to be installed.
2. During shipping, strap the wooden boxes to the vehicle using pliable straps or nylon ropes.
3. When fittings are shipped individually, handle them manually (for small sized fittings) or on wooden pallets.
4. When loading and unloading, any mechanical handling equipment (such as metal slings, hooks and chains) must not come into direct contact with RTR pipe nor fittings.
5. Unprotected flange faces should never be placed directly on the ground or on concrete floors.

1.3.3 Teflon® Thread Compound

1. Teflon® thread compound must be stored in its original packaging at temperatures between 10°C and 50°C. Make sure that the container lid is always closed when not in use to prevent any contamination.
2. Keep the thread compound dry, away from frost and direct sunlight.
3. The shelf life of Teflon® thread compound is 5 years from the production date, if stored at proper conditions.
4. Teflon® thread compound does not cure after application on the threads as it is grease-based.

1.3.4 Thread Sealant

1. Thread sealant must be stored in its original packaging at temperatures between 10°C and 21°C.
2. Keep the thread sealant dry, away from frost and direct sunlight.
3. The Shelf Life is 6 months from the date of delivery if stored properly.

Table 1: Estimated joints & length per crate (for high pressure classes, the number of joints / crate may be lower: refer to section 10 for details).

Pipe Diameter	Joints/ Crate	Meters/ Crate	Feet/ Crate	Crates/ Truck	Total Joints/ Truck
2″	102	930	3,060	10	1020
2 1/2″	69	630	2,070	10	690
3″	53	480	1,590	10	530
4″	30	270	900	10	300
5″	20	180	600	10	200
6″	12	110	360	10	120
6L or 150 mm	12	110	360	10	120

Figure 1: Stacking method of pipe up to a size of 6″ inside a crate frame; the crate in which this stack is enclosed is not shown in the figure below.

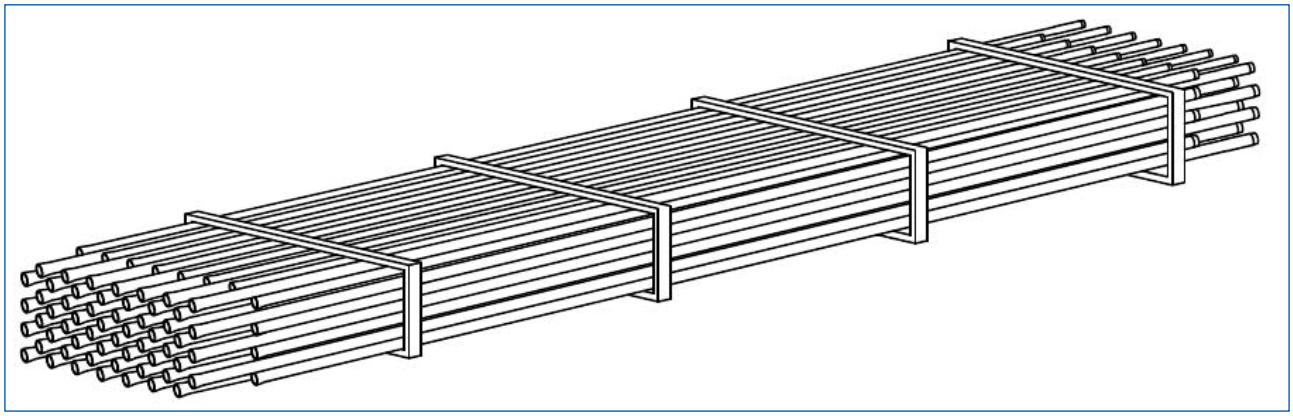

Figure 2: RTR pipe loading / off-loading method by crane.

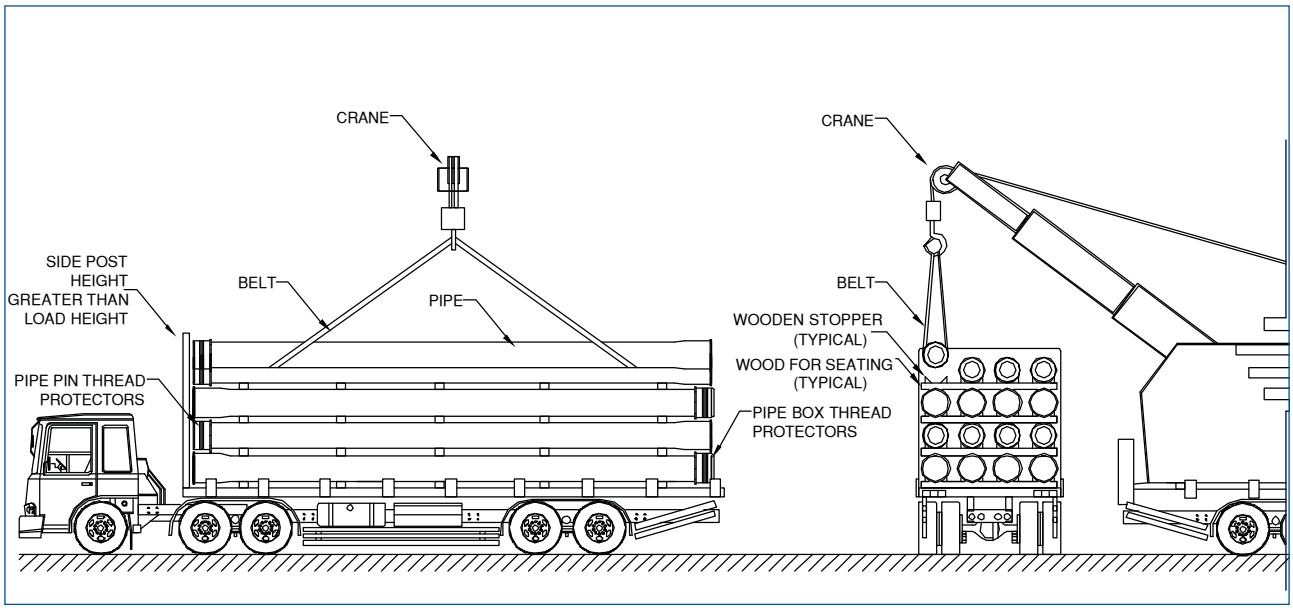

Picture 1: RTR pipe loading / off-loading method by forklift.

Picture 2: RTR pipe storage method in stockyard.

Figure 3: Wooden box for shipping RTR fittings.

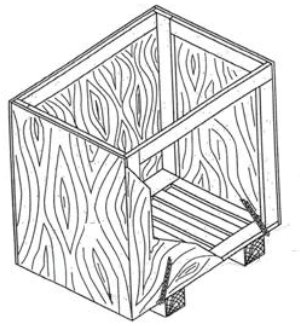

Packing method for fittings:
(For non-corrosive items only)

1. Minimum thickness of walls and cover – 4 mm Plywood.
2. Bottom structure of the case shall support entire load when lifting by slings.
3. Bottom shall allow handling by fork-lift.
4. Case structure shall allow stacking of cases of the same height.
5. Each layer shall be protected by corrugated sheet.

2 SITE STORAGE & PIPE LOWERING/STRINGING PROCEDURE

2.1 Pipe Distribution along the Trench

It is preferable to unload the fibreglass pipe alongside the trench directly from the truck, at a location as close to the trench as possible. If the trench is open, string out the pipe on the opposite side to the excavated earth. If possible, the pipe should be placed on the outside of sweeps or curves. Allow sufficient space between the pipe and the trench for excavator, cranes, etc. Avoid placing the pipe where it can be damaged by equipment traffic. If possible, store all pipe on soft level ground (ex: sand), wooden supports, or sand bags.

The correct direction of fluid flow is from the pin end into the integral box end. So the pipe installation for the integral joint should always start from the downstream side. In case of the line containing only coupling installation (and no integral joints), then the direction of installation is not important due to the coupling's symmetry.

If for some reason the trench is not yet open, determine which side the excavated earth will be placed and string the pipe on the opposite side, allowing ample room for the trenching machine.

2.2 Pipe Lowering Procedure (For Buried Installation)

1. Prior to lowering the pipeline or assembled joints, ensure that the trench is free from stones and foreign material.
2. String the pipe approximately one joint length (30 feet for standard joints) apart as shown in Picture 3. Crane(s) with spreader bar or side booms with a maximum support distance of 5 meters can be used to lower pipe into the trench. Spreader bars shall be equally spaced to avoid bending of pipe.
3. Care shall be taken to ensure that the RTR pipe does not slide off the slings.
4. Steel cables must not be used for lifting or handling. Hooks must not be used at the pipe ends to lift the pipe, nor should the pipe be lifted by passing a rope or sling through its inside.
5. In case of manual lowering, this should be done by at least two men. It is recommended that the weight carried by one man does not exceed 30 kg. Pipe weighing up to 175 kg can be lowered by means of two ropes. The ropes must be anchored to stakes as illustrated in Picture 4.
6. In case the field makeup is intended to be performed outside the trench, and if the pipe size is 6" or higher, it is required for the contractor to ensure that mechanical lowering equipment (such as side boom, cargo-crane truck or backhoe) is available on site at all times. The required quantity of lowering equipment shall be selected so as to avoid bending the pipeline beyond the published allowable limit and to ensure that any load lifted manually by site personnel is within the safe limits, during the process of lowering the pipe into the trench. Allowable bending limit for pipe is provided in the product data sheets.
7. If the pipeline is installed aboveground, start lowering the pipe into the trench at one end and steadily progress to the other end (Picture 4). This will prevent any slack or bowing of the line to occur.
8. In case of high water table conditions, refer to section # 3.5.

2.3 Ultraviolet Effects

It is important to note that **YELLOW BOX®** threads (both male and female) shall not be subjected to direct Ultraviolet (UV) rays. Exposure to UV rays from the sun for an extended period of time causes thread disintegration. Hence it is vital to cover them using the FPI-supplied thread protectors. In case no thread protectors are available at site, cover the threads temporarily using dark tarpaulin sheet, and arrange for replacements.

For the pipe surface (non-threaded area), ultraviolet effects are only limited to surface discoloration. Fiber bloom or fazing may occur if the pipe is exposed to sunlight for a long period of time (3 – 5 years). As this effect is only limited to the outer 0.1 to 0.25 mm of the pipe surface, the mechanical integrity of the pipe system is not affected in any way. Pipe will operate at 100% of its rating with no effect on its physical properties.

Picture 3: RTR pipe loading / off-loading method by forklift.

Pipe stringing inside the trench

Pipe stringing above the trench

Picture 4: Pipe lowering.

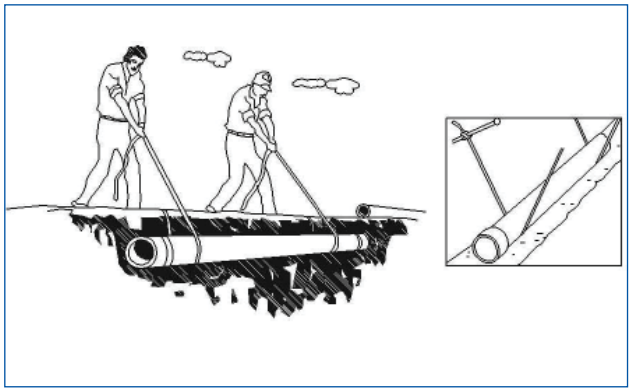

Individual joints

Joints already installed

3 TRENCH SPECIFICATIONS & BACKFILLING PROCEDURE

3.1 General

This section contains specifications for the trench and procedures for backfilling the RTR line.

FPI recommends that all high pressure pipes be buried. For other applications and/or when pipelines will not be buried, contact FPI for recommendations.

If it is necessary to install the fiberglass line under another pipe line crossing, connect three to four pipe joints together, install them under the existing line and then tie this section back into the previously installed or joined fiberglass pipe section. It may be necessary to dig a bell hole at the tie-in point to allow enough room for wrenches and personnel.

3.2 Common Trenching Guidelines

Trench excavation should not be too far ahead of the pipe laying team to ensure better control of the trench as well as for safety reasons. The excavated soil should be placed on one side of the trench, while allotting the other side for pipe or lifting equipment. If the trench consists of various layers of soils, these should be placed separately in order to use stone-free material for backfill.

3.3 Minimum Recommended Trench Width

Trench width must be maintained within certain limits. Minimum trench width depends on the method which is used to make-up the pipe. A very wide trench will increase the volume of backfill material required, compaction labour and effort. A very narrow trench will cause handling and make-up problems, as well as make the compaction of the side backfill difficult.

If the field makeup is intended to be performed inside the trench, it is required for the trench to be wide enough so as to accommodate a power tong, or the rotation of a manual wrench.

The minimum recommended trench width is given in Table 2.

3.4 Trench Depth

When there is no traffic load over the pipe, the minimum burial depth is 1 meter. In case of traffic loads, refer to section # 3.10.

3.5 High Water Table Conditions

Pipe lowering should always take place in a dry trench. It is not acceptable to lay pipe in flooded trenches. The civil contractor should provide necessary dewatering equipment to enable installation to proceed in a dry trench. In order to prevent pipe from floating, a minimum cover depth equal to one pipe diameter of granular soil (minimum dry density of 1,900 kg/m3) must be provided. Always insure that this minimum cover is available for all RTR lines before turning off the dewatering pump(s).

3.6 Pipe Bedding and Foundation

Refer to Figure 4 for backfilling terminology.

To ensure firm support for the pipe, proper bedding must be provided under the pipe. During trench excavation, a pipe bedding thickness of 150 mm or one pipe diameter (whichever is greater) must be provided. In the case of very poor native soils (silt, clay or mud), an additional 150 mm thick foundation layer must be provided below the bedding. Selected backfill material should be placed at the foundation and bedding levels. Wetting of the bedding in case of poor soil conditions is recommended.

The bedding material should provide firm, uniform and continuous support over the entire length of the pipe. High spots in the trench bottom will cause uneven bearing on the pipe, damage due to stress during backfill and unnecessary wear at these points. This is particularly significant if pulsation is present in the pipe system. Avoid sharp bends and abrupt changes in elevation in the line. Check the minimum bending radius in the product data sheets for guidance. If these conditions are unavoidable, then elbows, vacuum breakers, and/or check valves may be necessary. It is important to remove all sharp rocks, or objects and other abrasive material from the trench.

3.7 Pipe Embedment Zone

The selected backfill material should be evenly placed and properly compacted on both sides of the pipe. Appropriate hand or mechanical tamping shall be carried out by the civil contractor to achieve the specified degree of compaction required by the selected installation type (Picture 5). During the first one or two lifts, special care should be taken to place and to compact the backfill material under the pipe haunches (Figure 5). The best way to achieve this compaction is to do it manually by means of a wooden board. This is one of the most important installation steps and should be executed with care.

The Contractor should note that the compaction of clean and mixed sand is best achieved when the material is at its optimum moisture content. While the wetting of sand is recommended prior to compaction, trench flooding should be avoided to prevent the pipe from floating.

Following the first two layers where the backfill has been correctly placed, compaction should proceed from the sides of the trench towards the pipe. Clean backfill must be used with vibrator equipment as this type of equipment can drive stones or foreign material into the pipe wall.

The pipe embedment zone backfill should proceed in 150 to 300 mm lifts depending on backfill type. The pipe embedment zone backfilling and compaction should continue until the backfill reaches at least 150 mm above the pipe crown. Sand layers of more than 300 mm cannot be compacted properly and may result in loss or reduced support for the pipe.

After completion of backfilling in the pipe embedment zone, native material excavated from the trench may be used to complete the native backfill (Figure 4) to final grade. No compaction is required in these final backfilling layers except where specified by the engineer or if traffic or other high wheel-loads over the pipe is expected.

Multiple lines in the same trench must be separated by clean backfill or sand by a distance of 150 mm or one pipe diameter, whichever is higher.

3.8 Backfilling Materials (Pipe Foundation & Pipe Embedment Zone)

Most coarse grained soils are generally acceptable as backfill material for the foundation and pipe embedment zone. The below categories can be used as backfilling materials when compacted to the required degree:

Soil stiffness category (as per ASTM D2487-10)	Embedment compaction minimum recommended density SPD[1]	Relative compactive effort required to achieve minimum density	Compaction methods
SC1	Minimum density typically achieved by dumped placement	Low	Vibration or impact
SC2	85%	Moderate	Vibration or impact

Maximum particle size for all installations of YB is 13 mm. As a general guideline, the material used for backfill must be free of sharp rocks, heavy boulders, large clods of dirt, frozen lumps of mud in cold weather and any foreign material. If the native soil meets the above specifications, the same soil may be used in the pipe embedment zone.

Frozen earth will eventually thaw leaving the pipe with insufficient support and voids around the pipe. Foreign material or trash will eventually rot or break down which can also cause voids. Voids under or around the pipe must be avoided at all times.

In areas where the backfill material contains large amounts of sharp rocks, heavy boulders, large clods of dirt or frozen lumps, a padding (sifting) machine is recommended. Padding machines sift the backfill material for rocks and foreign material. Padding machines are often more economical than hauling sand or clean backfill to the job site. In environmentally sensitive areas, a padding machine may be required by local authorities.

[1]SPD is standard Proctor density as determined by ASTM Test Method D698 (AASHTO T-99).

3.9 Cement Stabilized Sand Backfill for Poor Soil Conditions

Cement stabilized sand is a mixture of one sack of cement (50 Kg) and one ton of clean sand. This backfill material provides excellent support for pipe where native soil conditions are poor. The mixture should be placed in the foundation, bedding, haunches and pipe embedment zone in layers of 150 – 200 mm. Each layer should be wetted with clean water and compacted with plate vibrators before the cement sets.

3.10 Installation at Road Crossings

Road crossings shall be carried out strictly as per the detail drawings supplied for the project. In the presence of occasional traffic loads, a minimum cover as per Table 3 shall be maintained. If this minimum burial depth can be maintained, it is not mandatory to run the RTR pipe through a steel casing or a conduit.

In case the traffic loads are frequent, or if the load intensity is higher than specified in Table 3, or if the minimum burial depth cannot be maintained, then the RTR pipe is run through a steel casing or a conduit. A typical example of a road crossing's detailed drawing is presented in Figure 6.

Prior to the insertion of RTR pipe into the casing pipe, spacers/centralizers shall be installed to the required distances. It is recommended to have at least 4 centralizers per pipe length. The assembled pipe section shall be a minimum of one pipe length longer than the casing pipe on both sides. The end-sealing rubber sleeve or concentric-boot shall be fixed to the casing pipe (Picture 6).

While inserting the RTR pipe into the steel casing, adequate end protection shall be provided on the RTR pipe end to avoid accumulation of debris and/or sand inside the RTR pipe. Care should be taken to ensure that the fiberglass pipe is properly bedded at the points of entry to - and exit from the steel conduit to prevent excessive wear on the pipe.

3.11 Backfilling Checks Before Hydro-Testing

Refer to section # 7.5.

Table 2: Minimum recommended trench width

Pipe Size	Min. Trench Width while making up the joints inside the trench	Min. Trench Width while making up the joints above the trench
All Sizes	10 X Pipe DN, with a maximum width of 1.85 meters	3.5 X Pipe DN, with a minimum width of ½ meter

Table 3: Recommended trench depth in the presence of occasional traffic loads.

Load Type	Traffic (wheel Load)		Minimum burial depth
-	KN	Lbs	Meter(s)
ATV LKW 12 (C)	40	9,000	1.0
ATV SLW 30 (C)	50	11,000	1.0
AASHTO H20 (C)	72	16,000	1.0
BS 153 HA (C)	90	20,000	1.5
ATV SLW 60 (C)	100	22,000	1.5

Figure 4: Backfilling of pipeline.

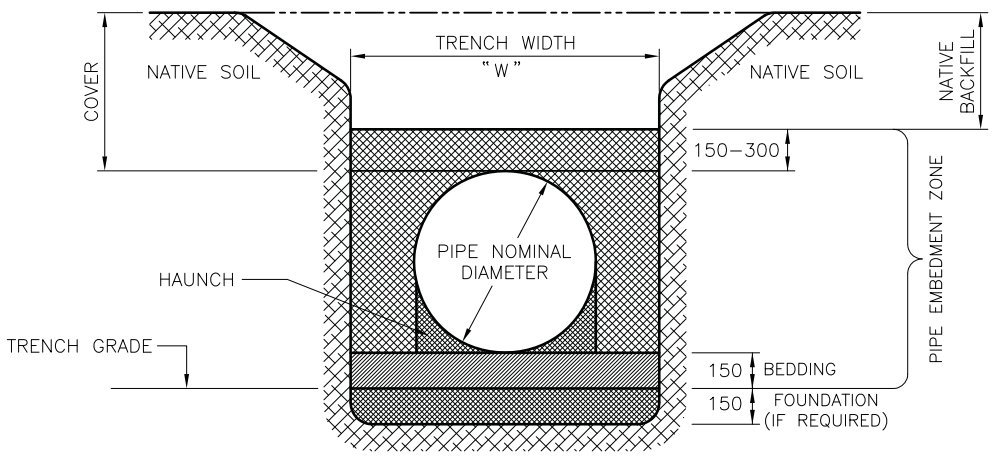

Figure 5: Backfilling pipe-haunches.

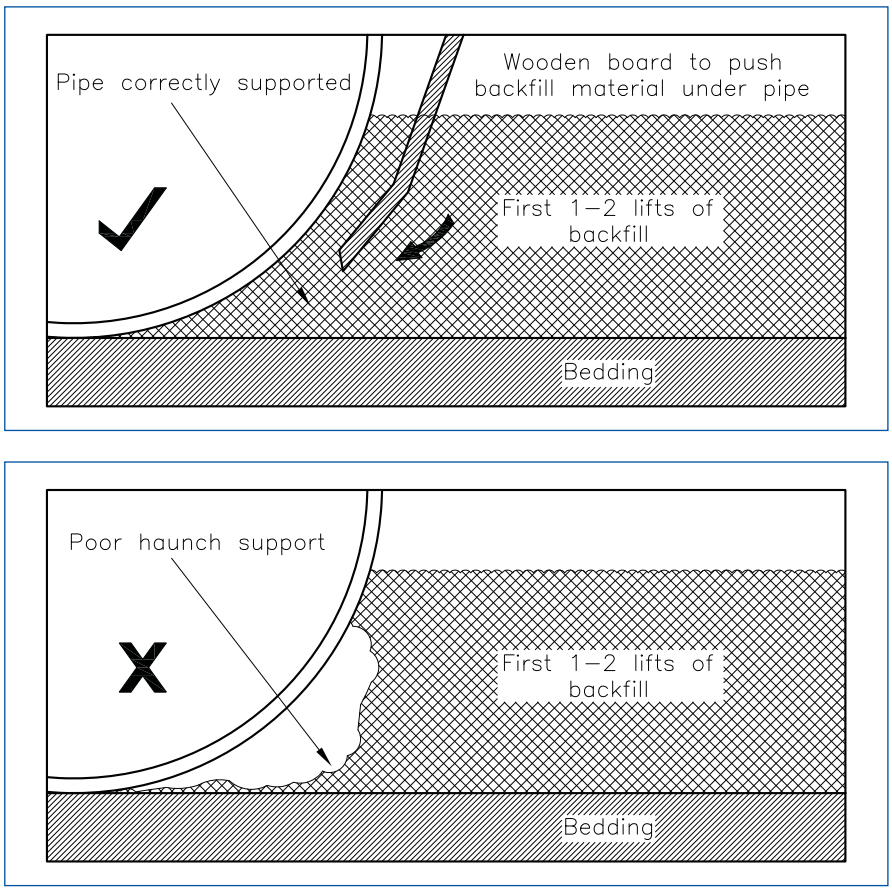

Picture 5: Compaction after backfill

Figure 6: Road crossing.

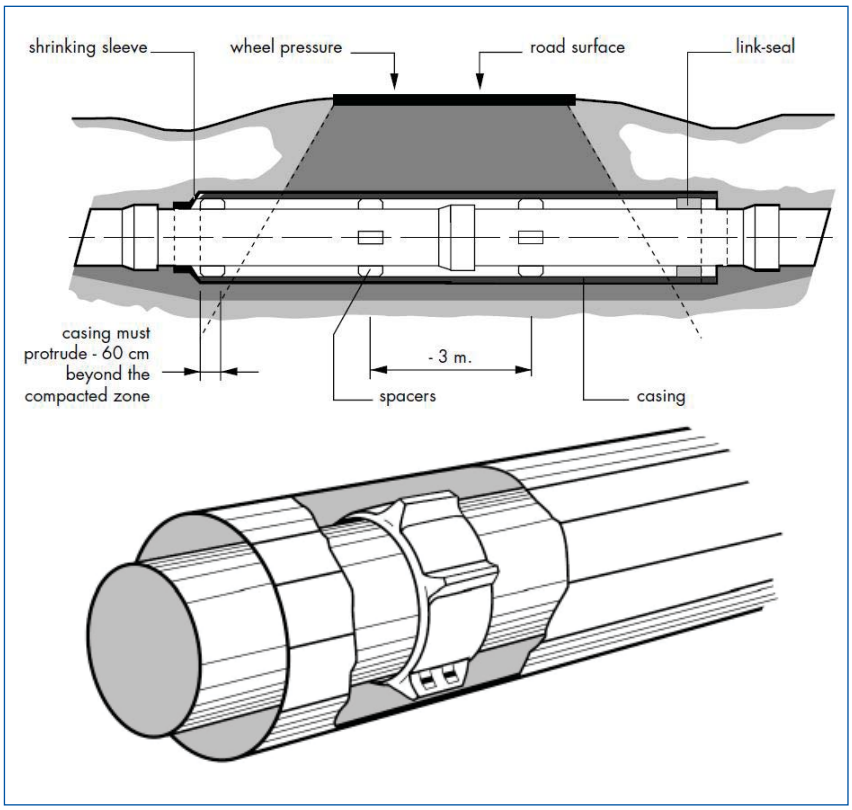

Picture 6: Centralizer and rubber end-sleeve.

4 BASIC TOOLS & EQUIPMENT

4.1 General Guidelines

Always be certain that the appropriate tools, fittings, wrenches, thread compound and tape or thread sealant are available at the job site before starting the installation.

4.2 Wrenches

All joints supplied are designed with an extra thickness at the ends called pipe upset. While using to makeup a pipe, all wrenches shall be applied only on the upset area.

Warning: Do not use steel pipe wrenches to make up fiberglass pipe. Steel pipe wrenches will cause point loading or wall deformation. This can give a false sense of tightness and can damage the product and void the warranty.

See Table 4 for the type and number of wrenches recommended for make-up of **YELLOW BOX®** products.

4.2.1 Strap Wrench

Strap wrenches (Picture 7 and Picture 8) distribute the torque circumferentially and are recommended to help prevent placing too much torque on the connection. For best results when using strap wrenches, the strap should be free from grease, thread lubricant, etc. Use a silica-based powder (Comet or Ajax powder) to prevent the strap wrench from slipping. A wire brush may be needed to clean any residue from the straps prior to fresh powder to the inside of the strap.

When using a strap wrench, ensure not to point-load the tubing. Point loading can collapse or damage the pipe wall when the wrench is pointed perpendicular into the pipe.

Two types of strap wrenches are commonly used:

1. A Ridgid® No. 5 strap wrench (Picture 7) is normally used for makeup of 3″ diameters and smaller. The handle of this wrench is approximately 18″ long.
2. The 24″ cast aluminium strap wrench (Picture 8) is normally used with 4″ and larger diameter pipe during makeup, or as a backup wrench on smaller diameters. The handle of this wrench is about 24″ long. This strap wrench could also be used in "hand-tightening" for larger diameter pipe.

4.2.2 Friction Wrench

Friction wrenches (Picture 9) are heavy duty wrenches with curved or 360° wrap-around jaws. The curvature of the jaws should be the same as the pipe OD. Friction wrenches work well as back-up wrenches. Friction wrenches are recommended for 4″ and larger diameters.

Note: Check the ID and adjustability of the friction wrench versus the OD of the pipe being installed.

4.2.3 Chain Tong

Chain tongs (Picture 10) can be used as long as the nose of the wrench does not point-load the pipe.

4.2.4 Power Tong

Power tongs are used to generate torque values which are difficult to achieve manually. If used correctly, power tongs provide a more consistent make up versus manual make up (Picture 11).

4.3 Brushes

2 types of brushes are commonly used:

1. Dope brush for applying Teflon® thread compound (Picture 12).
2. Stiff bristle brush to clean threads (Picture 13).

4.4 Pipe Stands

2 types of stands are commonly used to support the pipe during joint makeup:

1. Pipe jack (Picture 14) or adjustable pipe-stand (Picture 15).
2. Lazy board or fixed pipe-stand (Picture 16 and Picture 17).

4.5 Thread Compound or Sealant

4.5.1 Teflon® Thread Compound

FPI recommends using TF-15 thread compound (Picture 18) and Teflon® tape for all liquid applications.

Teflon® tape should be 25 mm wide and 0.1 mm thick and shall contain 100% Teflon®.

See Table 5 on page # 24 for the amount of thread compound and Teflon® tape recommended per diameter.

Minimum properties of Teflon® thread compound for use on **YELLOW BOX®** threads:

1. 15% minimum Teflon® content.
2. 60 to 120 mesh Teflon® particle size (powder is unacceptable).
3. The lubricant must be of API standard oilfield thread lube composition.
4. The lubricant should not be thickened with abrasives, clay, etc.

4.5.2 Thread Sealant

For all dry gas applications, FPI recommends a polysulfide based thread sealant (Picture 19). This one-part sealant cures in 10-15 minutes once exposed to moisture or humidity. Once the sealant is applied on the threads, a small amount of water is sprayed before the joint makeup by using a water spray bottle.

Thread sealant should also be used on all large-diameter **YELLOW BOX®** with 6 round threaded connections, and on all pressure classes above 172.5 bar (2,500 psig). See Table 5 on page # 24 for recommended amounts.

Table 4: Recommended installation tools per team for **YELLOW BOX®**.

Pipe Diameters	Wrenches
2″	1A & 1B or 2B
2 1/2″	1A & 1B or 2B
3″	1A & 1B or 2B
4″	1A & 2B or 1A, 1B & 1C
5″	1A & 2B or 1A, 1B & 1C
6″	1A & 2B or 1A, 1B & 1C
6″-L or 150 mm	1A & 3B or 1A, 2B & 1C
8″	1A & 4B or 1A, 2B & 1C
10″	1A, 2B & 1C
10″-L	1A, 2B & 1C

Key:

A	Ridgid® No. 5 or 24″ Cast aluminium strap wrench
B	Friction wrench or chain tong
C	Power tong
1, 2, 3 or 4	Indicates the quantity of required wrenches

Picture 7: Ridgid® No. 5 strap wrench

Picture 8: Cast aluminium strap wrench

Picture 9: Manual friction wrench fitted with an optional torque indicator.

Picture 10: Chain tong.

Picture 11: Power tong.

Picture 12: Dope brush.

Picture 13: Stiff bristle brush.

Picture 14: Pipe jack.

Picture 15: Adjustable pipe stand.

Picture 16: Fixed pipe-stands made of steel.

Picture 17: Fixed pipe-stands made of light-weight material (hard plastic or hard rubber).

Picture 18: Thread compound.

Picture 19: Thread sealant tube.

5 THREAD MAKEUP & INSTALLATION PROCEDURE

5.1 Scope

The procedures in this section are general in nature. More specific, additional details may be provided during the actual installation in the form of project specific work instructions. It must be ensured that all levels of staff are aware of these procedures in order to ensure the quality of the connection. It is important that only qualified personnel perform the thread makeup procedure.

The objective is to ensure that the installed pipeline will meet the specified performance requirements.

Although these procedures are as complete as possible, it is impossible to describe every circumstance that may be encountered in the field. Because of this, FPI's experienced site supervisor may vary the described procedure in order to achieve an optimum solution using the latest installation techniques.

In case the joining is performed without the supervision of FPI, the responsibility of proper makeup (torque application) lies with the end-user, or their contractor.

5.2 Crew Size

It is difficult to give a broad recommendation for the number of people needed on a specific installation since this varies with the type of installation. The personnel requirements vary depending on the pipe size, pipe weight, installation location, surroundings of the job site, weather conditions and other similar influences. Generally, a minimum of 3 people are needed to install threaded fiberglass line pipe. The normal number of personnel required to operate each installation tool is given below:

Tool type	No. of personnel required
Strap wrench	1
Friction wrench	2
Chain tong	2
Power tong	2
Pipe stand	1

See Table 4 on page # 17 for guidance on required number of installation tools. FPI can provide recommendations for specific circumstances.

5.3 General Precautions

If it is required that the pipeline be left unattended for more than 1 hour (example: during lunch hour), thread caps or similar protection should be installed on open ends of the installed line. This is to avoid any sand/ dirt /mud from intruding into the line. It is required that any open ends of the line be capped overnight.

In case of sand/dust storm, snow, hail or rain, use an appropriate shelter such that the joint to be made up is protected from adverse weather conditions. In case of sunny, cold, humid or foggy weather, joint installation can continue as normal provided the sealing compound is stored at the correct conditions described in sections # 1.3.3 and 1.3.4.

5.4 Visual Inspection: Pipe & Fittings

All pipe, fittings and components shall be visually inspected for damages that may have occurred during shipment. 100% of the exterior surface shall be inspected visually and the internal surface shall be inspected where accessible. Defective pipe or fittings must not be used in the pipe system.

5.5 Visual Inspection: Threads

Threads shall be cleaned before any visual inspection. In case the integrity of the threads is under doubt, the site supervisor shall be contacted to check the fitness of the thread. A detached thread may lead to cross threading, in which case the joint needs to be backed out and the threads must be re-examined for any possible damage.

Threads shall be free from visible tears, cuts, grinds, shoulders or any other imperfections which break the continuity of the threads within the normal mating surface on the pin and the box at the final makeup position. Superficial scratches and surface irregularities that do not affect the continuity of thread surfaces are occasionally encountered and may not necessarily be detrimental. Use API 15HR as a reference for acceptable visual standards for threads. As a guide to acceptance, the most critical consideration is to ensure that there are no detectable protrusions on the threads to score mating surfaces.

During installation, if thread damage is suspected, lay the joint aside and replace it. In case a wrong makeup is observed, break out the connection and continue installation as normal after inspecting the retrieved threads.

If the thread has been previously used and is being reinstalled, remove sand, dirt or any foreign material which may cause improper make up and sealing. Wash pin and box threads with a hydrocarbon (ex: petrol) or a solvent (ex: acetone, methylene chloride) which will remove the old thread lubricant, tape or foreign material. Dry both threads completely. Any liquid left in the base of the threads will prevent good thread lubrication.

5.6 Inspection: Thread Compound / Thread Sealant

Thread compound shall be inspected prior to its use, ensuring that there is no contamination (such as sand or any other foreign matter).

In case the Teflon® thread compound is used, ensure that it is between 10°C and 50°C for optimum brush-ability.

In case thread sealant is used, ensure that its temperature is between 40°C and 55°C to ensure correct application on the threads.

5.7 Thread Makeup: Integral Joint / Threaded & Coupled Joint

1. The correct direction of fluid flow is from the pin end into the integral box end. So the pipe installation for the integral joint should always start from the downstream side. In case of the line containing only coupling installation (and no integral joints), then the direction of installation is not important due to the coupling's symmetry.
2. Ensure that the thread protectors were correctly in place on the pin and box. Remove the thread protectors and inspect all the threads for integrity / cleanliness. Use a dry dope brush (or a plastic stiff bristle brush) to remove any dirt or sand from the threads. Any sand or foreign material in the threads will cut them and may result in failure. Foreign material in the threads can also cause a false sense of make-up and create leaks. Check the pipe body for any damages.
3. During the making up of the connection, the box upset must be secured in place by means of a backup wrench and the pin end is rotated into the stationary box end. Place lazy boards or timber under the stationary box end to enable a proper alignment and makeup. If the makeup is done manually, the handle of the backup wrench can rest on the ground. In case a hydraulic power tong is used for joint makeup, engage the handle of the backup wrench to the torque indicator of the power tong.
4. Apply Teflon® tape to the pin threads. Use only 1" wide X 0.1 mm thick Teflon® tape. It is very important that the tape is applied properly; if applied improperly the tape can ball up, cause a false sense of tightness and cause joint leaks. Apply two wraps under tension around the pin thread in a clockwise direction, while pulling it into the thread form. Start from the last thread on the pin face proceeding to the vanish point of the larger body end of the thread leaving approximately two threads visible and then returning to the last thread of the pin face. Overlap the tape slightly to ensure full coverage on every revolution (Picture 20). While returning to the last thread, do not apply the second layer of tape in exactly the same position as the first layer. Make sure to stagger the second layer over the seams of the first wrap. Do not add extra wraps around the pin end. This will cause improper make-up. Refer to Table 5 for standard Teflon® tape usage rate. If the tape runs out or is torn in two during the wrap, do not splice in the middle of the wrap. Remove the partial layer and start a new layer.

5. Apply Teflon® thread compound to both the pin and box threads with a dope brush. Before applying the thread compound, stir thoroughly. Apply enough Teflon® thread compound to have a thick film in the root of the threads (see Picture 21). In cold weather, if the bristles of the dope brush are stiff, they can tear Teflon® tape. When it is cold (below freezing), use a flat stir stick to apply the thread compound and prevent tearing the tape. Always apply the thread compound in the same (clockwise) direction as the tape to prevent the tape from unwinding. Refer to Table 5 for the estimated Teflon® thread compound usage rate.
6. Thread Sealant will be used for all dry gas applications. This one-part sealant cures in 10-15 minutes once exposed to moisture. Refer to Table 5 for the estimated thread sealant usage rate. If a thread sealant is used, the following additional precautions shall be observed during thread makeup:
   a. Apply the thread sealant using a "comb" which has the thread profile on it. The comb is typically a thin slice of a threaded connection with truncated thread crests (approximately 30% less thread height compared to standard round thread).
   b. Using a caulking gun, apply the sealant onto the pin and box and then distribute it uniformly over the thread area with the comb. The comb will fill the sealant in the root of the threads to about 50% of the total thread height.
   c. Apply the sealant quickly so as to save as much time as possible for the makeup procedure before the cure starts to set.
   d. Lightly spray the sealant with water.
   e. Pay close attention to the joint alignment as there will normally be a maximum of three alignment attempts available before curing proceeds to such an extent as to disable installers from concluding the make-up.
   f. If the curing starts before the makeup is complete, back the connection out and thoroughly clean the now cured sealant out of the threads with a wire brush. It may not be possible to completely clean the sealant out of the threads; but attempt to remove the majority of it.
   g. Once clean, re-apply the sealant again and re-make the connection.
7. Insert the pin thread into the box thread and manually rotate until the hand tight position is reached, while checking for correct alignment. It is possible to use a strap wrench to obtain the hand tight position. Depending on the size and weight of the pipe, pin alignment can either be achieved manually (using pipe jack, lazy boards, adjustable pipe stand, etc.) or facilitated by means of powered lifting equipment such as pipe cradle, side boom / cargo-crane truck (Picture 22). If the pipe is not engaged straight, any misalignment will cause a false sense of tightness. Make sure that the pipe is aligned properly at all times during the makeup.
8. Use a tong fitted with a torque indicator for power tight makeup (Picture 23). Set the torque indicator to the required torque level. Nominal torque range is shown in Table 5. When using a power tong, place the pipe jack near the end of the joint being installed; make sure the joint of pipe is straight to allow proper make up of the connection; one person may be needed in the center of the joint to prevent the pipe from wobbling or jumping. Appropriate wrench can be selected per Table 4 on page # 17.
9. The last thread on the pin end shall just enter inside the box at final position of the thread makeup. This position is called the power tight (final) standoff. Tolerance for power tight standoff is ±1 thread. Note that at this stage, the torque shown by the torque indicator (if used) will normally be within the nominal torque range as shown in Table 5. While obtaining the power tight standoff, it is allowed to exceed the average nominal torque value by a maximum of 30%.
10. During the makeup process, a few scratch marks will occur on the pipe OD due to the action of the tong on the pipe surface. This is quite normal and does not affect the performance of the system. The pipe ends are designed with extra thickness ("pipe upset") to handle this installation technique. Tolerance for the depth of these scratch marks is such that the minimum total wall thickness of the pipe (TW as specified in the product drawings / catalogue), measured from the inside diameter, shall remain intact.

5.8 Thread Makeup: Elbow and Other Fittings

1. Depending on the availability of lifting equipment and the thread size, elbows can be installed in two ways:
   a. Directly on the existing pipeline (Picture 24).
   b. Makeup the elbow with a nipple; the free pin end of the nipple can then be connected to the existing line (Picture 25).
2. Elbows installation must be performed with extreme care. It is important after the makeup that the elbow faces in the correct direction as per the isometric drawing. Any misalignment can be adjusted by tightening the joint in the elbow or the pipe joint next to the elbow until the correct alignment is achieved.
3. In case of a major misalignment do not over torque. The connections on the previous installed joints can be slightly tightened until correct alignment is achieved. It is not recommended to back out the joint in the elbow.
4. After achieving the correct alignment, installation can continue from the other side of the elbow.
5. Use a similar technique as above for the installation of Tees.
6. Fittings should be made up to the same torque value as the torque specified for the equivalent sized coupling.

Installation of elbows or tees may require concrete thrust blocks. The size of the thrust block depends on the soil modulus, operating pressure and pipe diameter. An engineering company should be used to size the thrust blocks based on recommendations from system design. Contact FPI for assistance.

5.9 Flanged Connections

1. Makeup flanges according to section # 6.
2. Follow the flange bolt tightening sequence in section # 6.

Table 5: Joint makeup torque / Teflon® tape consumption / Thread compound consumption / Thread sealant consumption

Thread Type	JOINT MAKEUP TORQUE				TEFLON® TAPE	TEFLON® THREAD COMPOUND / SEALANT	
	Nominal Torque Range for Integral Joint (IJ) in ft-lbs		Nominal Torque Values for Threaded Coupler (T&C) / Fitting in ft-lbs		No. of connections per Roll of Tape (10 m X 25 mm X 0.1 mm tape)	No of connections per gallon (3.8 liter) of TF-15 Teflon® thread compound	No of connections per 11 fluid oz. (325 ml) tube of thread sealant
	Minimum	Maximum	Minimum	Maximum			
2 3/8" 8Rd EUE-Long	110	140	110	140	8 joints / 240 ft. / 73 m	107 joints / 3210 ft. / 978 m	16 joints / 480 ft. / 146 m
2 7/8" 8Rd EUE-Long	175	200	175	200	6 joints / 180 ft. / 55 m	93 joints / 2790 ft. / 850 m	14 joints / 420 ft. / 128 m
3 1/2" 8Rd EUE-Long	275	325	275	325	5 joints / 150 ft. / 46 m	82 joints / 2460 ft. / 750 m	11 joints / 330 ft. / 101 m
4 1/2" 8Rd EUE-Long	350	400	350	400	4 joints / 120 ft. / 37 m	60 joints / 1800 ft. / 549 m	8 joints / 240 ft. / 73 m
5 1/4" 8Rd XLTC	700	750	700	750	2 joints / 60 ft. / 18 m	35 joints / 1050 ft. / 320 m	5 joints / 150 ft. / 46 m
5 1/2" 8Rd LTC	475	525	475	525	3 joints / 90 ft. / 27 m	47 joints / 1410 ft. / 430 m	7 joints / 210 ft. / 64 m
6 5/8" 8Rd LTC	700	750	700	750	2 joints / 60 ft. / 18 m	43 joints / 1290 ft. / 393 m	5 joints / 150 ft. / 46 m
6 5/8" 8Rd XLTC	1,100	1,200	1,100	1,200	1 joints / 30 ft. / 9 m	26 joints / 780 ft. / 238 m	3 joints / 90 ft. / 27 m
7" 8Rd LTC	950	1,000	1,100	1,200	1.5 joints / 45 ft. / 14 m	37 joints / 1110 ft. / 338 m	4 joints / 120 ft. / 37 m
7 5/8" 8Rd LTC	950	1,000	1,100	1,200	1.5 joints / 45 ft. / 14 m	33 joints / 990 ft. / 302 m	4 joints / 120 ft. / 37 m
7 5/8" 8Rd XLTC	1,100	1,200	1,250	1,350	1 joints / 30 ft. / 9 m	22 joints / 660 ft. / 201 m	2.5 joints / 75 ft. / 23 m
9 5/8" 8Rd LTC	1,200	1,300	1,400	1,600	1 joints / 30 ft. / 9 m	20 joints / 600 ft. / 183 m	3 joints / 90 ft. / 27 m
9 5/8" 8Rd XLTC	1,800	1,900	2,000	2,100	0.75 joints / 22.5 ft. / 7 m	15 joints / 450 ft. / 137 m	2 joints / 60 ft. / 18 m
10 3/4" 8Rd STC	1,400	1,500	1,500	1,700	0.8 joints / 24 ft. / 7 m	17 joints / 510 ft. / 155 m	2 joints / 60 ft. / 18 m
10 3/4" 8Rd XLTC	-	-	2,000	2,200	0.6 joints / 18 ft. / 5 m	13 joints / 390 ft. / 119 m	1.5 joints / 45 ft. / 14 m
11 3/4" 8Rd STC	-	-	1,600	1,800	0.7 joints / 21 ft. / 6 m	15 joints / 450 ft. / 137 m	2 joints / 60 ft. / 18 m
11 3/4" 8Rd XLTC	-	-	2,100	2,300	0.55 joints / 16.5 ft. / 5 m	12 joints / 360 ft. / 110 m	1.5 joints / 45 ft. / 14 m
13 3/8" 8/6 Rd STC	-	-	1,700	1,900	0.67 joints / 20.1 ft. / 6 m	13 joints / 390 ft. / 119 m	1.5 joints / 45 ft. / 14 m
13 7/8" 8/6 Rd XLTC	-	-	2,400	2,600	0.4 joints / 12 ft. / 4 m	9 joints / 270 ft. / 82 m	1 joints / 30 ft. / 9 m

Notes:
(1) Standard joint length is considered as 30 ft. or 9.15 meter
(2) To convert above torque into N-m, use 1 ft-lb = 1.36 N-m
(3) When using thread sealant, torque values will be slightly higher; contact FPI for recommendations

Picture 20: Application of Teflon® tape.

Picture 21: Thread compound application.

Picture 22: An example of the use of cradle and cargo-crane truck to achieve alignment.

Picture 23: Joint makeup tools.

Manual chain tong fitted with a torque indicator

Manual friction wrench fitted with a torque indicator

Strap wrench

Hydraulic power tong fitted with a torque indicator

Picture 24: Making up the elbow directly on the pipeline.

Picture 25: Making up the elbow with a pipe nipple.

6 FLANGE TIGHTENING PROCEDURE

6.1 General Guidelines

This section describes the steps to be followed while tightening the bolts of RTR to steel flanges or existing RTR flanges.

YELLOW BOX® flanges are flat face flanges. All steel flanges should be of the same flat face configuration.

If a raised face steel flange is used with a flat faced RTR flange, a simple spacer ring should be used to take up the raised face shoulder and present a flat surface to the RTR flange (Figure 7 and Picture 26). This is done to avoid excessive bending moment on the outer circumference of the RTR flange. This spacer ring shall be made of a corrosion resistant material, such as SS316.

It is highly recommended to use steel backing plate / ring for each flange supplied (Picture 26). Flange backing plates redistribute the bolt loads evenly over the circumference of the flange body and thereby protect flanges from over-torque in the field.

Lubricated washers must be used to prevent the nuts and possible bolt heads from scrapping or damaging the RTR flanges.

6.2 Precautions

1. RTR flanges shall be assembled tension-free and with accurate alignment.
2. Never use flange bolts to pull two pipe sections together.
3. Only connect flanges belonging to the same nominal size & drilling class.
4. While connecting RTR flanges to steel flanges ensure that there is no load or movement transferred from the steel line to the RTR line – this is normally covered during system design recommendations by means of thrust blocks (Picture 27).

6.3 Gasket

The flange must be installed with spiral wound gasket to seal the connection (Picture 28). The recommended gaskets are Flexitallic® or Garlock® brand ANSI B 16.5 standard, graphite filled with stainless steel ring(s).

Always double check the ID of the gasket to make sure it matches the flange face ID or is slightly larger.

6.4 Installation Procedure

1. Clean the flange face, holes and gasket.
2. Position the other flange to be assembled to the RTR flange in the right place. Make sure that the holes of the two flanges are aligned and levelled.
3. Insert approximately 3 steel bolts in the lower part of the flanges. If the flanges are correctly aligned, the steel bolts should penetrate through the drill holes of the mating flanges without any restriction.
4. Use an appropriately sized gasket (spiral wound type). Inspect the gasket for any defect prior to installation. Place the gasket in position from the top. Make sure that the gasket is properly aligned inside the holes of the flange.
5. Bolt to mating flange with the proper number of steel bolts, as shown in Table 6. Bolt threads shall be clean and lubricated to achieve proper torque.
6. Use washers and nuts on both sides. Number each bolt starting from the top and following a clockwise sequence (Figure 8).
7. Lubricate and then hand-tighten all the nuts.
8. Tighten all nuts using a torque wrench to 50 ft-lbs. The nuts shall be tightened as per the sequence described in Figure 8. Increase the torque gradually. Apply bolt torque to the specified range shown in Table 7, which is applicable to both new and old bolts.

9. After completing one round of tightening, repeat the tightening sequence one more time. The bolts on one side tend to get loose while tightening the bolts on the opposite side.
10. It is allowed to exceed the recommended bolt torque by 20% in case of any gasket leak or other special circumstances. Exceeding the 20% limit may result in serious permanent cracks in the flange.
11. Note that spiral wound gaskets are normally for single use. Once the flange is disassembled, it is recommended to replace the gasket.

6.5 Determination of the Bolt Lengths

There are 4 different types of flanged connections. Bolt length can be calculated as per below formula:

#	Type	Bolt length formula in mm
1	RTR to steel connected with bolt and nut	$L = T + t + p + r + m + 5$
2	RTR to RTR connected with bolt and nut	$L = 2T + p + 2r + m + 5$
3	RTR to steel connected with stud bolt and two nuts	$L = T + t + p + 2r + 2m + 5$
4	RTR to RTR connected with stud bolt and two nuts	$L = 2T + p + 2r + 2m + 5$

Where:

T = thickness of the RTR flange
t = thickness of the steel flange
p = thickness of the gasket (typically 5 mm)
r = thickness of the washer
m = height of the nut
5 = allowance in addition to the tolerance of the flange thickness

Table 6: Information on ANSI B16.5 flange bolts.

Pipe Size (inches)	ANSI 150		ANSI 300		ANSI 600		ANSI 900		ANSI 1500	
	Bolt Qty	Bolt Size (inches)	Bolt Qty	Bolt Size (inches)	Bolt Qty	Bolt Size (inches)	Bolt Qty	Bolt Size (inches)	Bolt Qty	Bolt Size (inches)
2	4	5/8	8	5/8	8	5/8	8	7/8	8	7/8
2 ½	4	5/8	8	3/4	8	3/4	8	1	8	1
3	4	5/8	8	3/4	8	3/4	8	7/8	8	1-1/8
4	8	5/8	8	3/4	8	7/8	8	1-1/8	8	1-1/4
5	8	3/4	8	3/4	8	1	8	1-1/4	8	1-1/2
6 or 6-L	8	3/4	12	3/4	12	1	12	1-1/8	12	1-3/8
8	8	3/4	12	7/8	12	1-1/8	12	1-3/8	12	1-5/8
10	12	7/8	16	1	16	1-1/4	16	1-3/8	12	1-7/8

Table 7: Bolt torque for flange assembly

Pipe Size (inches)	Torque Values (ft-lbs)				
	ANSI 150	ANSI 300	ANSI 600	ANSI 900	ANSI 1500
2	100	50	55	75	75
2 1/2	130	65	80	115	115
3	165	80	100	130	140
4	150	160	210	250	260
5	200	230	320	380	400
6 or 6-L	260	200	260	320	320
8	450	370	480	550	570
10	570	380	520	570	810

Notes: To convert above torque into N-m, use 1 ft-lb = 1.36 N-m

Figure 7: Examples of raised face (RF) flange, flat faced (FF) flange and spacer for RF flange.

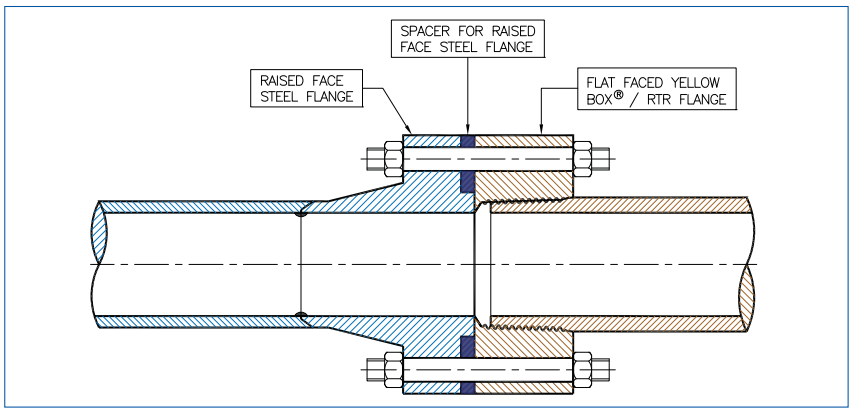

Picture 26: Example of a SS316 spacer for raised face steel flange and a steel backing plate / ring for YB flange.

Picture 27: Typical thrust block.

Picture 28: Spiral wound gasket.

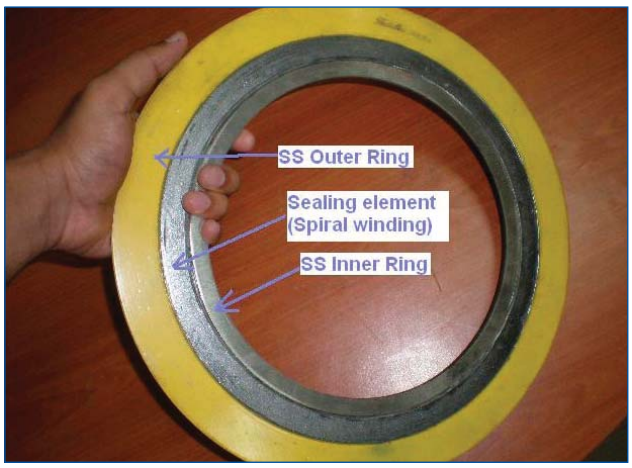

Figure 8: Flange bolt tightening sequence.

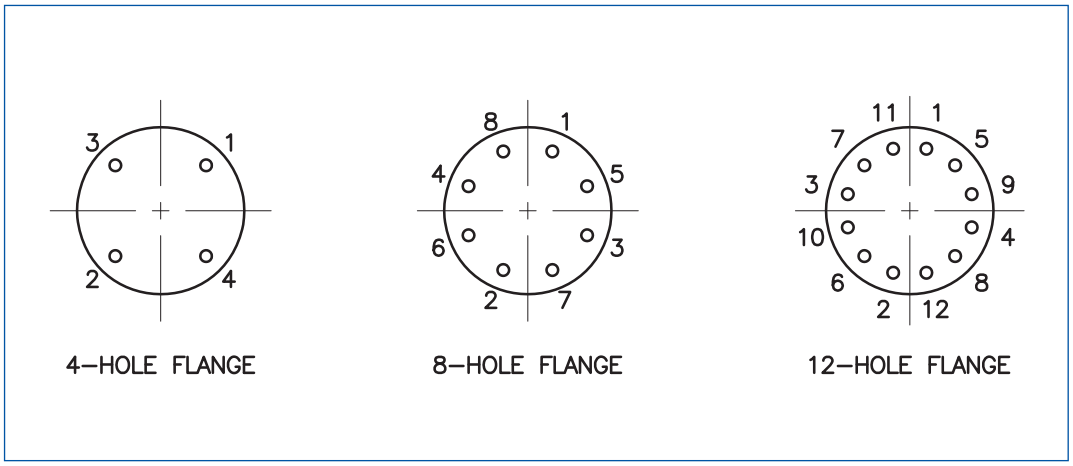

7 FIELD HYDRO-TESTING RECOMMENDATIONS

7.1 Scope

The procedures in this section are general in nature. It must be ensured that all levels of the contractor's and principal's staff are aware of these procedures in order to assure a successful hydro-test.

The procedures written are as complete as possible. It is not possible to describe all the different circumstances that may be encountered in the field. For this reason, an experienced field engineer/supervisor from FPI may change these procedures in order to achieve an optimum solution using the latest techniques and testing methods.

The pressurization steps given in this document are part of the standard FPI hydro-test method for **YELLOW BOX®**. In case any project specific hydro-testing requirements or specifications have been agreed to in written form, then the agreed project specific steps will be ruling.

7.2 Precautions

The following safety precautions shall be taken while hydro-testing the system:

1. The test area shall be cordoned off.
2. Warning signs shall be placed at all adjacent areas.
3. Only experienced personnel shall operate test equipment.
4. Only authorized personnel shall be involved in the testing and inspection operations.
5. Only one person shall be in charge.
6. Do not change anything in the pipeline while under pressure.
7. The testing equipment shall be installed at a sufficient distance from the pipeline.
8. If welding is performed on any steel component, the RTR materials shall be protected from the welding sparks.
9. Testing with gas or air is extremely dangerous and should never be done.

7.3 Test Frequency

It is recommended that large or complex installations be tested in subsections as they are completed. FPI strongly recommends that pressure tests be performed on the first 300 meters (1,000 feet) of the installation to assure the installation techniques are satisfactory. This is particularly important when installation personnel have not previously installed the same size, brand, end connection and pressure class of FPI pipe. Consult FPI in case of any questions.

7.4 Visual Inspection

A visual inspection shall be conducted throughout the system prior to the testing process, to ensure that the system has been installed in accordance with the applicable system design documents and as per the recommended backfilling procedure.

Any external damage of the RTR pipe that may have occurred during the installation and/or handling process shall be identified. In case of any damage, the RTR pipe or fittings shall be repaired as per the repair procedure in section # 8.

Both open ends of the installed line shall be covered with thread caps or similar protection, when not in use. This is to avoid any sand or dirt from entering the line.

Ensure that all the repair work is completed and the test equipment is properly connected to the line before starting the hydro-test; the pipe should be cleaned (pigged) if required by the main contractor.

7.5 Backfilling Checks Before Field Hydro-Testing

1. Ensure that all recommendations from the system design have been implemented.
2. The pipe shall be completely backfilled and compacted except for the pipe joints that must be left uncovered for inspection during hydro-testing.
3. If thrust blocks are required, they must be in place, 100% cured and adequately covered prior to pressure testing.
4. If thrust blocks are installed over fittings, at least 20 meters of straight pipe before and after the fitting (including the joints) shall be backfilled completely and compacted.
5. The sand cover from the pipe crown shall be a minimum of 500 mm for straight pipe sections without elbows.
6. For elbow sections, the sand cover shall be a minimum of 600 mm from the crown of the pipe.
7. Unsupported section lengths shall not exceed twice the nominal diameter.
8. It should be a standard practice to test small sections in large/long installations.

Complete the backfilling as soon as possible after successfully testing the system as a safety precaution and to eliminate the chance for any damage to the pipe. Possible examples of damage are floatation due to flooding, shifting of the line or impact damage due to cave-ins.

7.6 Field Hydro-Test Preparation

Upon completion of the pipeline installation, make sure that all the accessories/flange connections are properly tightened to the required torque as per section # 6, Table 7 and the below instructions.

The recommended gaskets are spiral wound (Flexitallic® or Garlock® brands) graphite filled, with stainless steel inner & outer rings for both hydro test and permanent connections. Gaskets can only be re-used if there is no visible damage or excessively permanent compression after the hydro-test. In case of doubt, use a new gasket.

Connect all necessary valves and equipment prior to filling the pipeline with water. Any permanent valves in the system shall be kept fully open and the check valves shall be removed from the system. Arrange for the necessary equipment i.e. filling pump with break tank, pressure pump, etc. The blind flanges with required connections for air venting (such as ball valve) shall be available to close the system.

If the total line length to be hydro-tested is more than 1 KM or if the pipeline has a major difference in elevation over its length, a pig is launched into the system to remove all air. The pig shall be launched from one side of the pipeline (preferably the lowest point). A blind flange with a ball valve shall be connected to the other side. Introduce a substantial slug of water into the pipe, and insert the foam pig behind it and flange up. Pump more air-free water through the line behind the pig; provide a constant pressurized flow behind the pig and do not stop until the pig reaches the end of the line. The pig should push the air ahead of it, both uphill and downhill. When the pig arrives at the end of the line, close the valve. If the bore of the end valve is big enough, it is possible to pump out the pig through the same valve; for instance, a soft foam pig inserted inside a 6″ line can be extruded through a 2″ end valve. Due to any reason, if it is not possible to pump out the pig, it is acceptable to pressure test with the pig inside the line.

7.7 Water Filling

1. The system shall be flushed prior to the hydro-test. Flushing of the system shall be carried out from the lowest point of the pipeline. Seawater, fresh water or brackish water can be used for this purpose. Pigging the line ensures that all dirt, sand, air-bubbles or other foreign material are cleaned out of the pipe system. Pigging may not be necessary on short, level lines of less than 1 KM; it is recommended on long lines or lines with changes in elevation.
2. Continue flushing until 100% water (no air) appears at the outlet.
3. Only soft, foam or polyurethane pigs should be used with RTR pipe to prevent damage to the inside surface of the pipe.
4. Pig trackers and pig signals can be used to trace the location of the pig.
5. Exercise caution when pigging to prevent water hammer especially when displacing air.
6. The pig speed shall be controlled either by means of pig trackers or by controlling the water feed rate. Pig speed shall not exceed 1.5 meters/second. Ensure that all the vents and drains are opened while filling the system with water. Vent the system to avoid any air entrapment which may cause pressure fluctuations during hydro-testing. Once the pigs are flushed out, continue flushing until there are no more indications of entrapped air in the system.

7.8 System Pressurization

After the line is filled 100% with water, seal the entire test section by closing the valves. A device capable of continuously pressurizing the test section shall be connected to the line with the required calibrated temperature and pressure recorders.

If changes in elevation are present in the pipe system, the difference in pressure head must be taken into consideration. Take account of the pressure head difference between the lowest point of the system and the connection point of the pressure gauge. The excess pressure head occurring due to elevation must be subtracted from the test pressure to reach the correct test pressure on the lowest parts of the pipe system. All gauges and recorders shall be calibrated prior to be used in the system. All relevant calibration certificates shall be available on site.

The rate of pressurization at all stages shall not exceed 5 bar / minute. Start pressurizing the system gradually in a steady and controlled manner to 0.8 times of the design pressure. Maintain this pressure for at least 20 minutes to allow the system to stabilize.

Once stabilized, continue pressurizing the system gradually in a steady and controlled manner to the required field hydro-test pressure, and maintain this pressure for 4 hours (or as agreed) as an integrity test.

During the hydro-test, the entire pipeline shall be carefully inspected for any leaks from joints or pipe body.

In case of any decrease in pressure, check the following possible causes:

1. Temperature variation during day and night.
2. Leaks of accessories connected to the system.
3. Leaks at the gaskets.
4. Air lock.
5. Leaking test equipment.
6. Stabilizing time too short.
7. Leaking threaded joint.
8. Leaks in pipe as a result of impact damage.
9. Excessive settlement of the pipe system.

If a leak is observed from the flange connections, it is not permitted to over-torque the flange when the line is under pressure. Take the pressure off the line and then open the leaking flanges. The cause of the leak should be determined. If the flange or gasket is found to be damaged, it must be replaced.

In case of any leaks in the pipe body or joints, the test shall be terminated and the leaks repaired.

If no leaks are observed during the inspection, the hydro-test is successful and the system is ready for use after depressurization and backfilling (if applicable).

7.9 System Depressurization

Depressurization of the system shall be carried out carefully and gradually to avoid building up any negative pressure in the system. The rate of depressurization at all stages shall not exceed 5 bar per minute. All vents shall be kept open to allow adequate air inlet into the system while draining the pipeline. Water shall be drained slowly and in a controlled manner. Dismantle the hose connection from the pressure pump and seal the ends with suitable plugs. Joints must be backfilled immediately after the test to avoid any damage.

8 REPAIR PROCEDURES

8.1 Available Repair Options

Depending on site conditions, there are primarily five methods for repairing a leaking RTR line:

1. Spare Joint with Flanges & Coupling.
2. Factory Repair Joint.
3. Repair Coupling (Adhesively Bonded / TB-TS Joint).
4. Laminate Joint.
5. Leaking Elbow Replacement.

Each of the above methods will be discussed.

8.2 Spare Joint with Flanges & Coupling

If a spare joint of pipe of correct length and correct configuration is available on site, it may be easier to replace the leaking joint by using a spare joint and a set of RTR flanges.

Prior to initiation of this repair procedure, ensure that enough backfill is excavated so as to enable movement of pipeline during repair and flange alignment. Expose at least 25 meters of pipeline on either side of the damaged portion. If site conditions do not allow such excavation, then two sets of flanges (double-flanged connection containing a total of 4 flanges) can be used instead of one set to minimise excavation length.

There are 4 different scenarios that may occur during a leak:

1. Leaking joint (integral box).
2. Leaking joint (coupling).
3. Leaking pipe (between integral boxes).
4. Leaking pipe (between couplings).

Replacement of the leaking line with each of these scenarios is outlined in Figure 9, Figure 10, Figure 11 and Figure 12 respectively.

Figure 9: Replacement of a leaking Joint (Integral box).

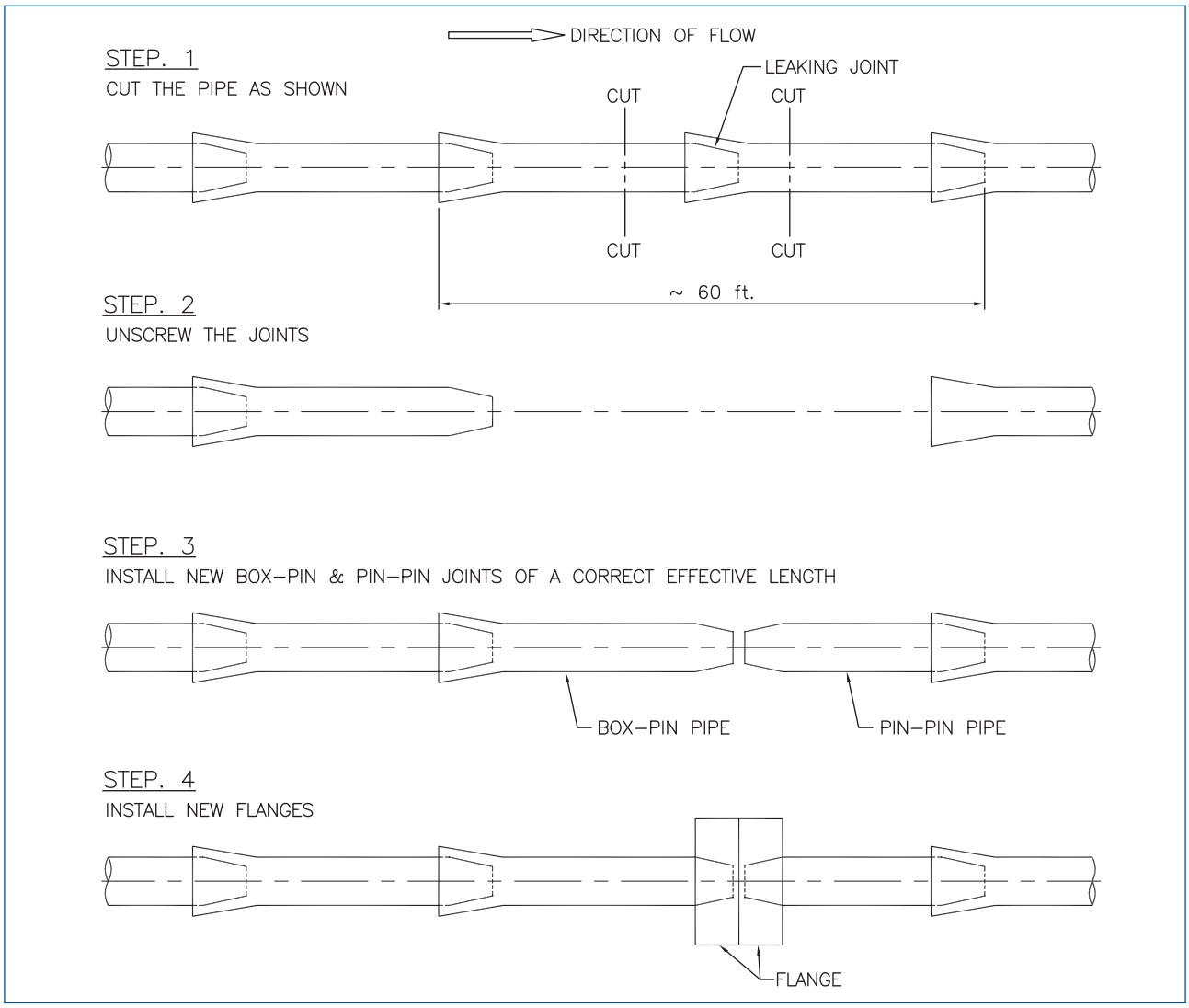

Figure 10: Replacement of a leaking Joint (Coupling).

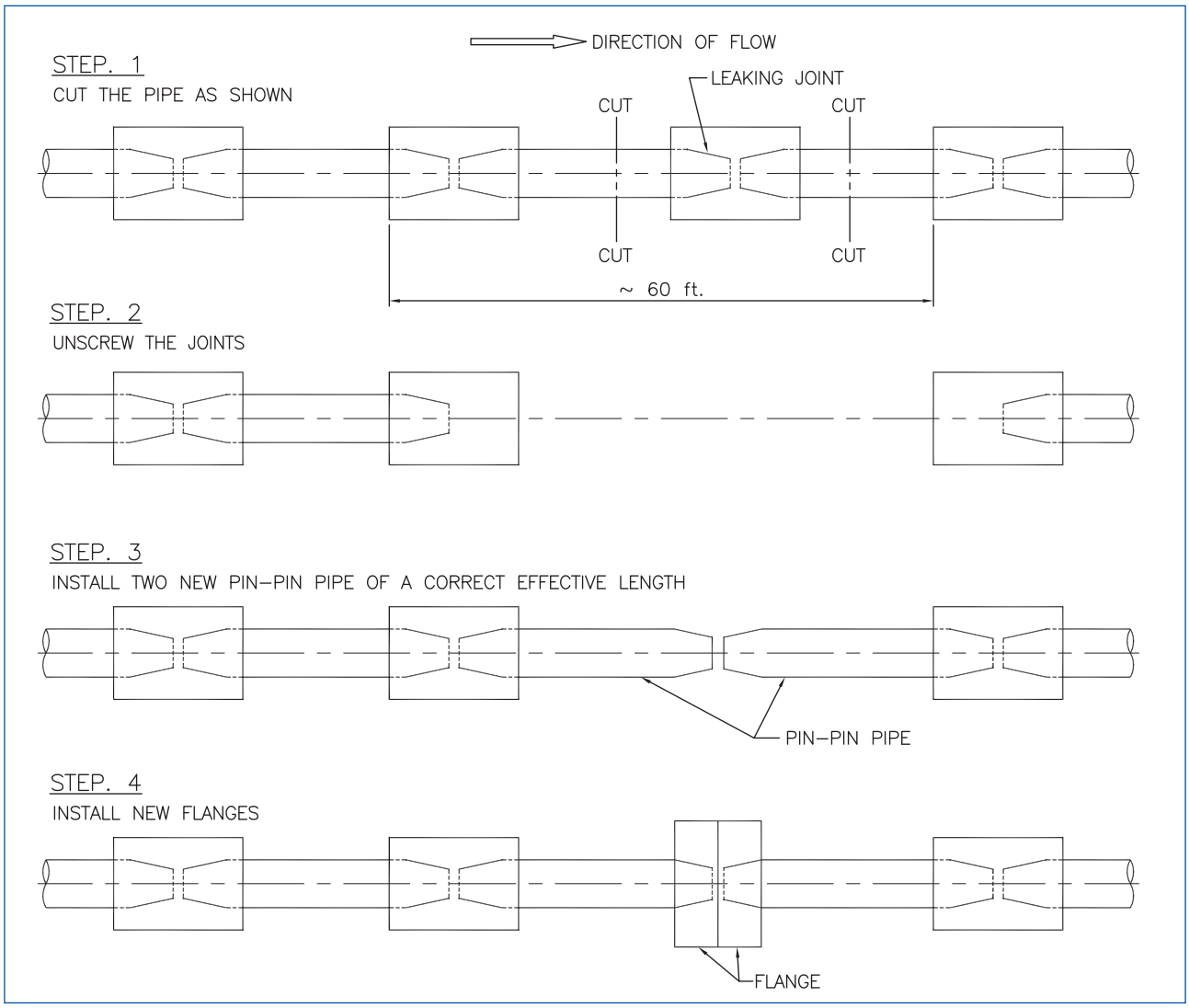

Figure 11: Replacement of a leaking pipe section (between integral boxes).

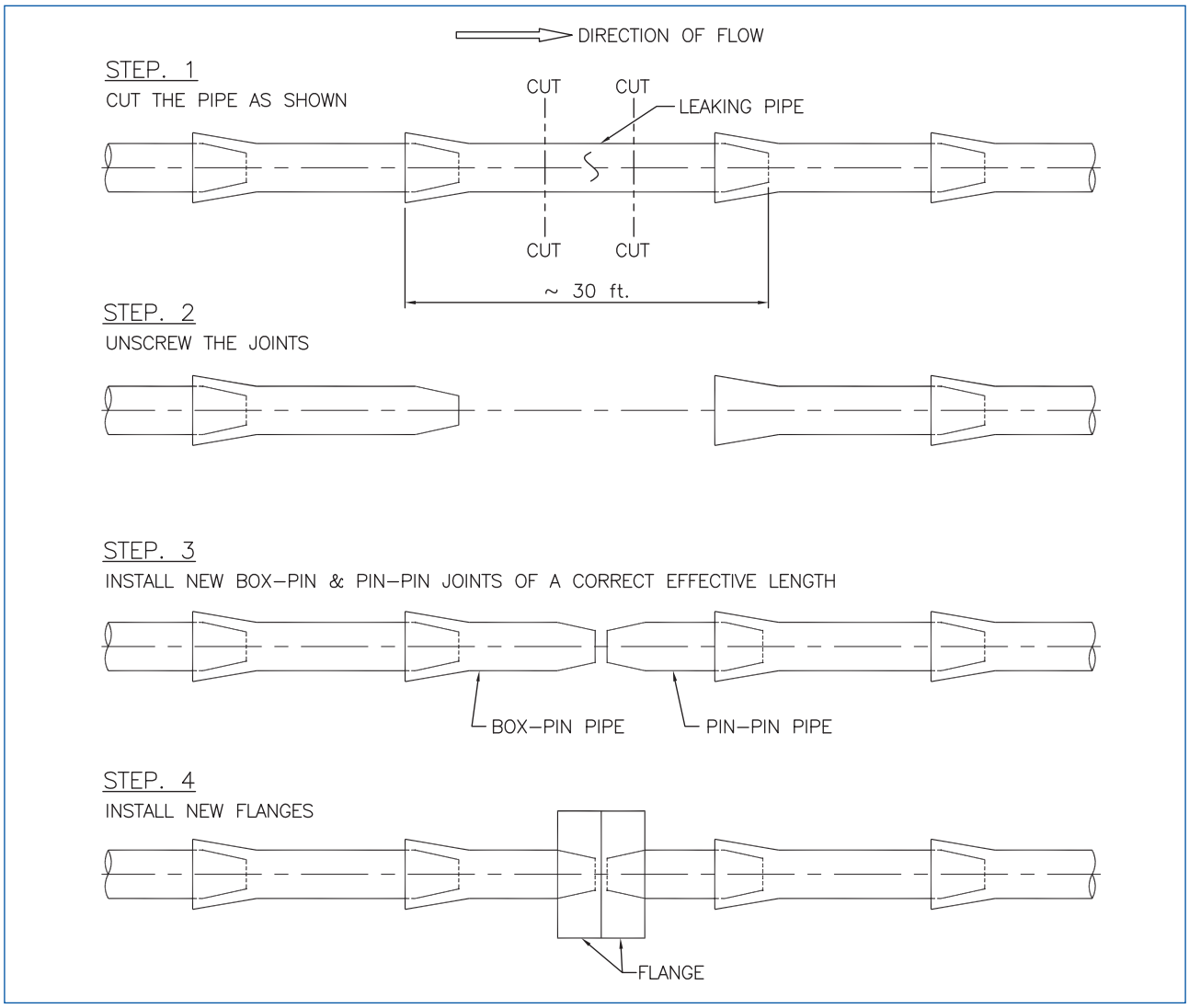

Figure 12: Replacement of a leaking straight pipe section (between couplings).

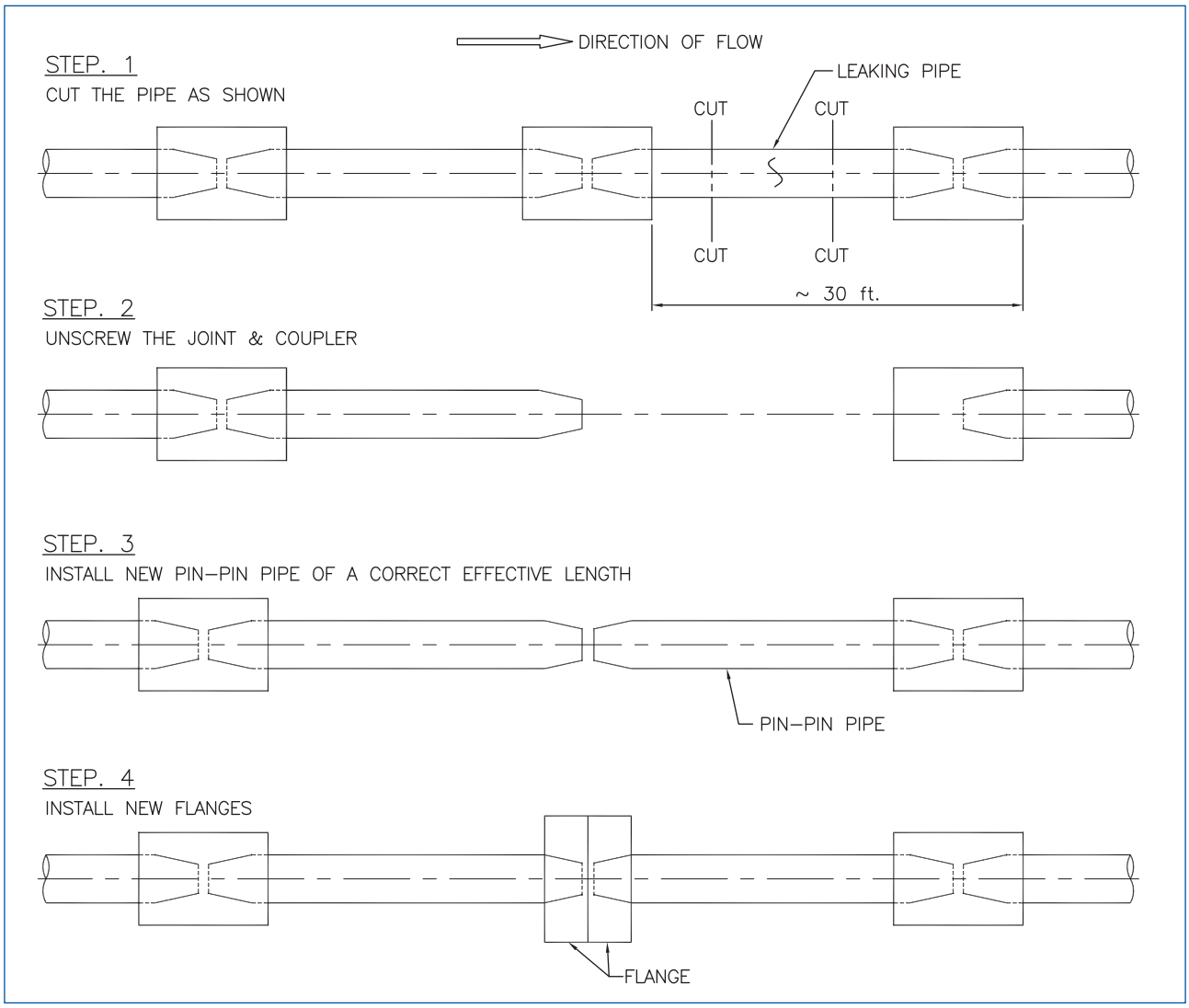

8.3 Factory Repair Joint

1. A factory repair joint is simply a full length joint of pipe cut into two sections with a set of flanges in the middle (Figure 13).
2. This repair joint is shipped from the factory in two sections, such that it forms a full pipe length from end-to-end when assembled. These two sections consist of box-flange and pin-flange configuration respectively.
3. The leaking pipe in the field is cut into two sections and each section is unscrewed from the adjacent joints.
4. Both sections of the repair joint are installed and the flanges are then bolted up.

Figure 13: Typical repair joint.

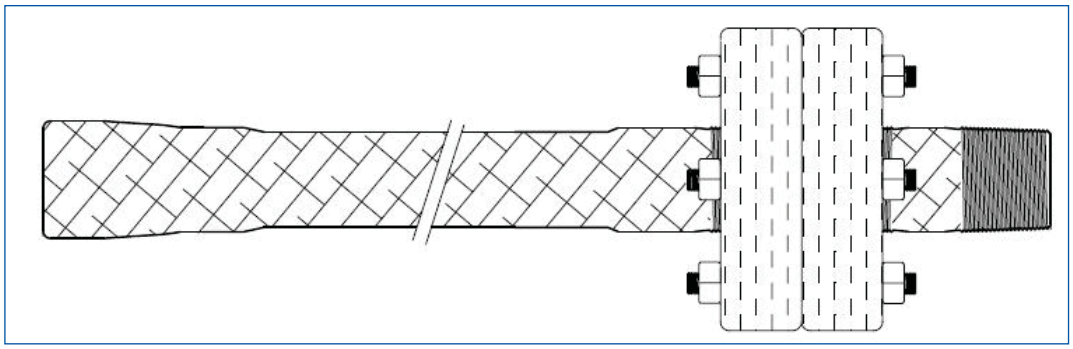

8.4 Repair Coupling (Adhesively Bonded / TB-TS Joint)

The repair coupling is ½ to ¾ meter in length. It has extra wall thickness with tapered bell ends for bonding.

Although designed for repairing high pressure products, the repair coupling can also be used on low-medium pressure line pipe. This repair method can be used on all brands of RTR line pipe as long as the mating dimensions match. Various styles of repair couplings are available depending on the product and pressure rating. Be sure to use the proper repair coupling for the pipe being replaced. Contact FPI for the correct repair coupling configuration.

Refer to Figure 14 for installation procedure.

1. Uncover the line at least 15 meters for pipe sizes 4″ & below, and at least 25 meters for pipe sizes 5″ & larger to allow insertion into one end of the repair coupling.
2. Cut out the damaged section of pipe and machine one end in the form of a tapered spigot.
3. Place the repair coupling on the tapered end, making sure you have a tight, dry fit. Once adhesive is applied, the repair coupling may makeup an additional ¼″ to ½″.
4. While the repair coupling is on the first tapered end, lay it next to the other section of pipe to measure for the second taper. Measurements should allow for the second taper to insert into the repair coupling. Always dry fit the repair coupling before applying adhesive to make sure measurements and taper are correct. Allow extra length to compensate for wet fit versus dry fit.
5. Apply adhesive to all clean bonding surfaces and insert the tapered pipe end into the bell end of the repair coupling. This can be done by lifting the line or moving it to one side, and then re-engaging the mating parts. Make certain all tapers are tightly locked.
6. For the first bond, use a hammer and a block of wood to drive the joint together. For the second bond, use ropes and a puller to pull the joint together. This procedure will assure a tight fit.

Figure 14: Replacement of a leaking joint with a repair coupling (adhesively bonded joint).

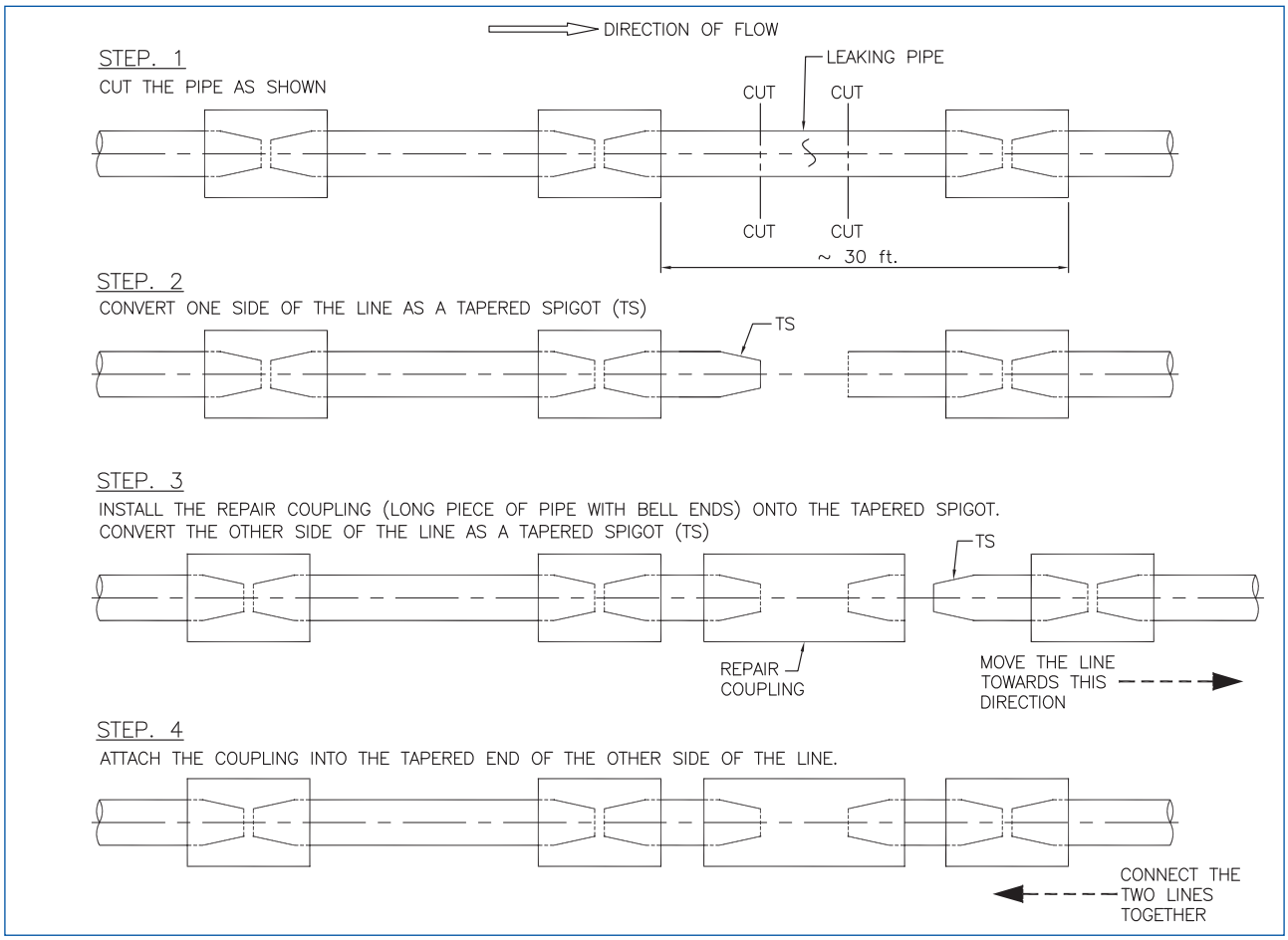

8.5 Laminate Joint

This joint is installed by means of lamination (Figure 15). A leaking pipe/joint section is cut and then replaced using laminated connection(s). Design of this connection varies with size and pressure rating – contact FPI.

The preparation of this rigid joint requires craftsmanship and shall only be performed by Future Pipe Industries' approved installation personnel.

Figure 15: Replacement of a leaking joint with a laminate joint.

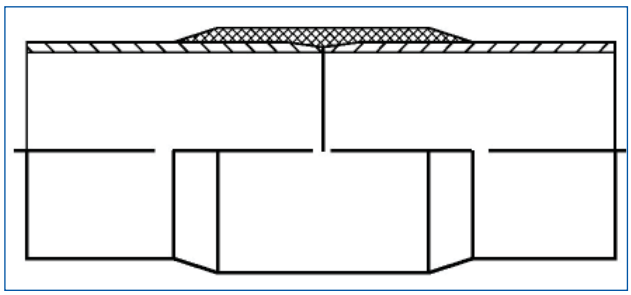

8.6 Leaking Elbow Replacement

Follow the steps given in Figure 16 for replacement of a leaking elbow.

Figure 16: Replacing a leaking elbow (the integral joint is shown here as a primary connection for demonstration).

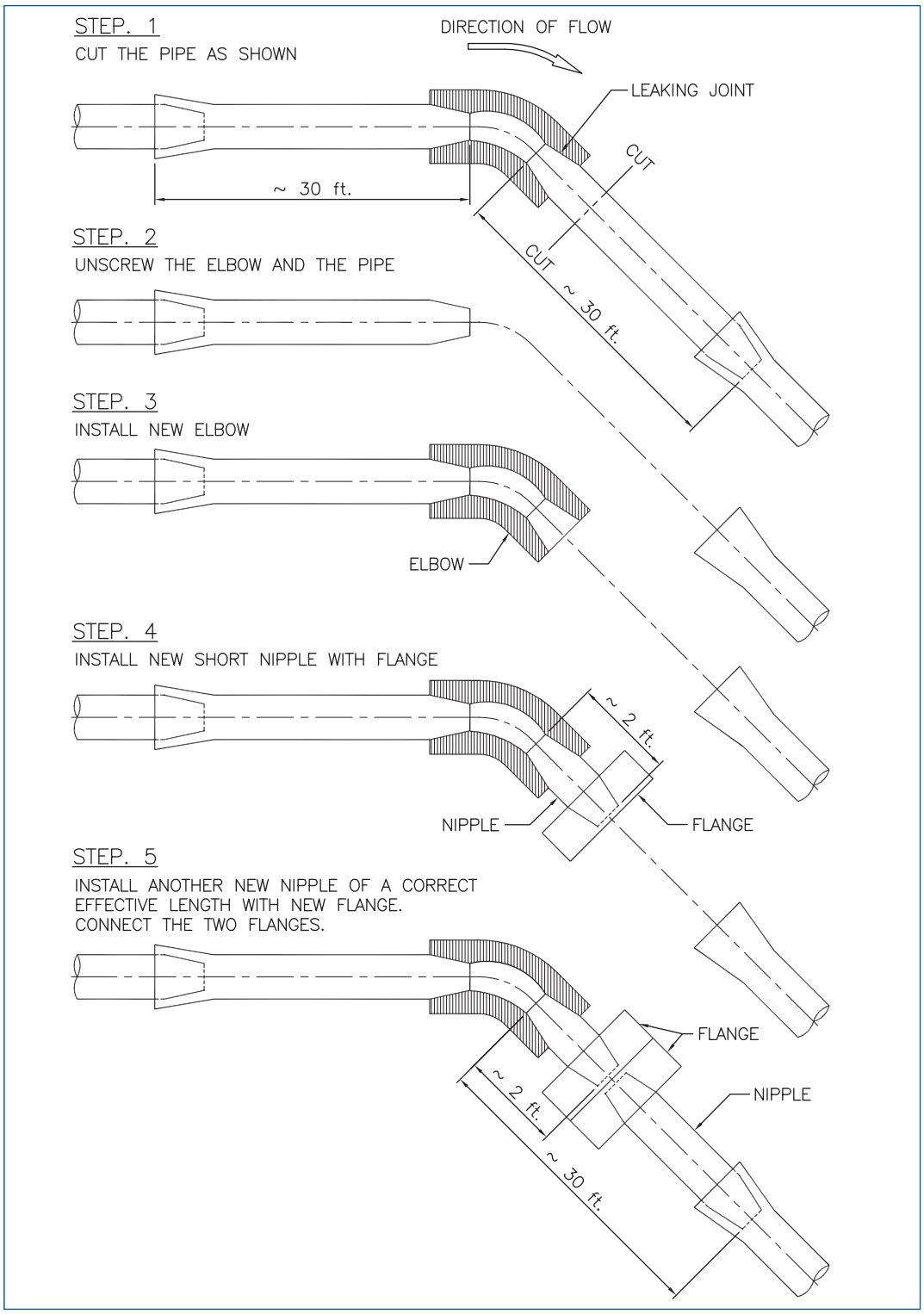

9 HYDRAULIC PROPERTIES & HEAD LOSS CHARTS

RTR pipe and fittings have an absolute surface roughness of 0.01 mm to 0.02 mm as they are produced on polished steel moulds. This surface roughness is equivalent to a minimum Hazen Williams coefficient of 150 over the entire design lifetime of the pipe system. Due to its smooth surface (and resultant low relative pressure drop), it is generally possible to use smaller diameter RTR piping to transport fluids when compared to steel piping.

Pressure loss charts for some common fluids are presented in this section.

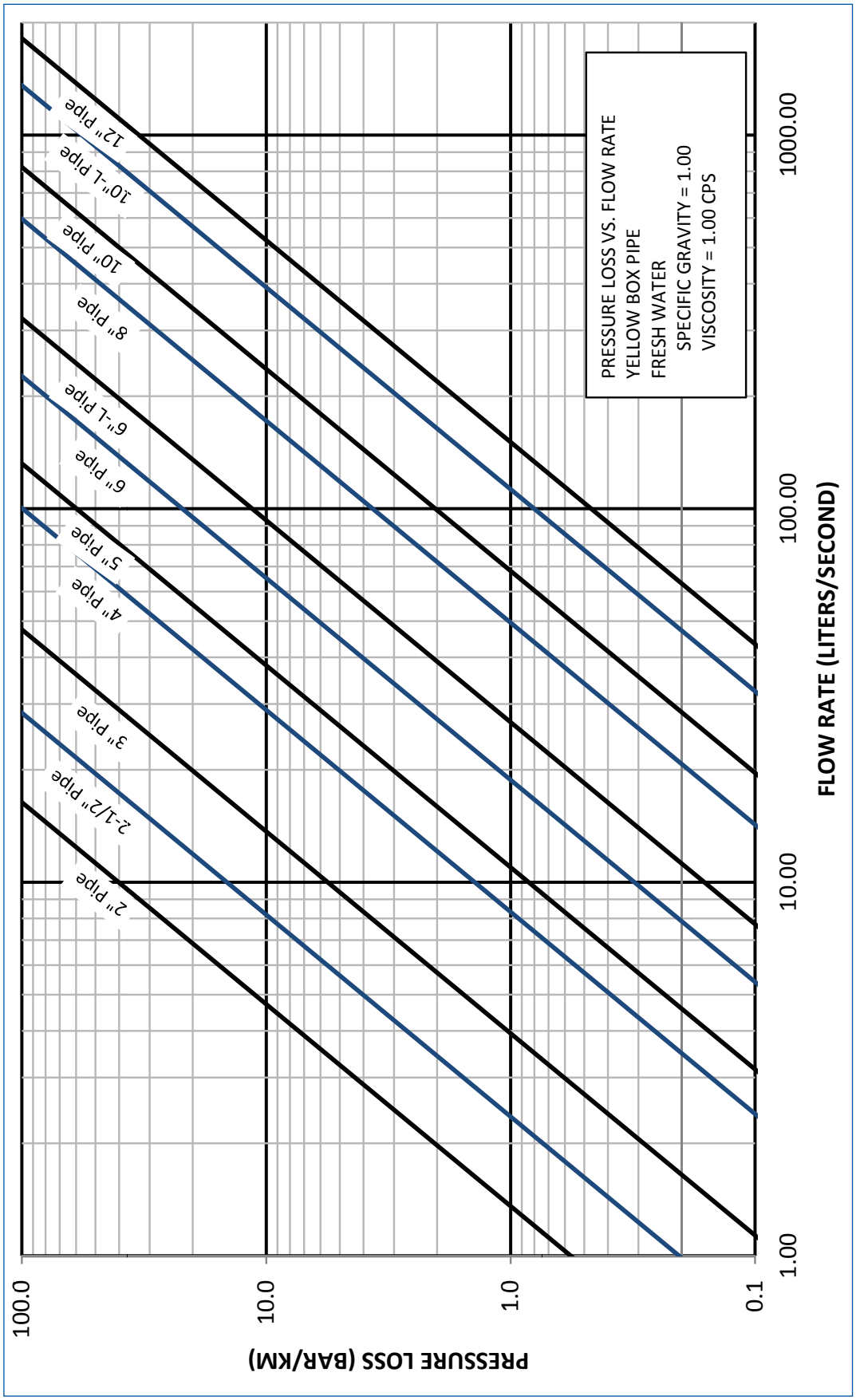
PRESSURE LOSS VS. FLOW RATE
YELLOW BOX PIPE
FRESH WATER
SPECIFIC GRAVITY = 1.00
VISCOSITY = 1.00 CPS
2" pipe
2-1/2" pipe
3" pipe
4" pipe
5" pipe
6" pipe
6"-L pipe
8" pipe
10" pipe
10"-L pipe
12" pipe
PRESSURE LOSS (BAR/KM)
100.0
10.0
1.0
0.1
FLOW RATE (LITERS/SECOND)
1.00
10.00
100.00
1000.00

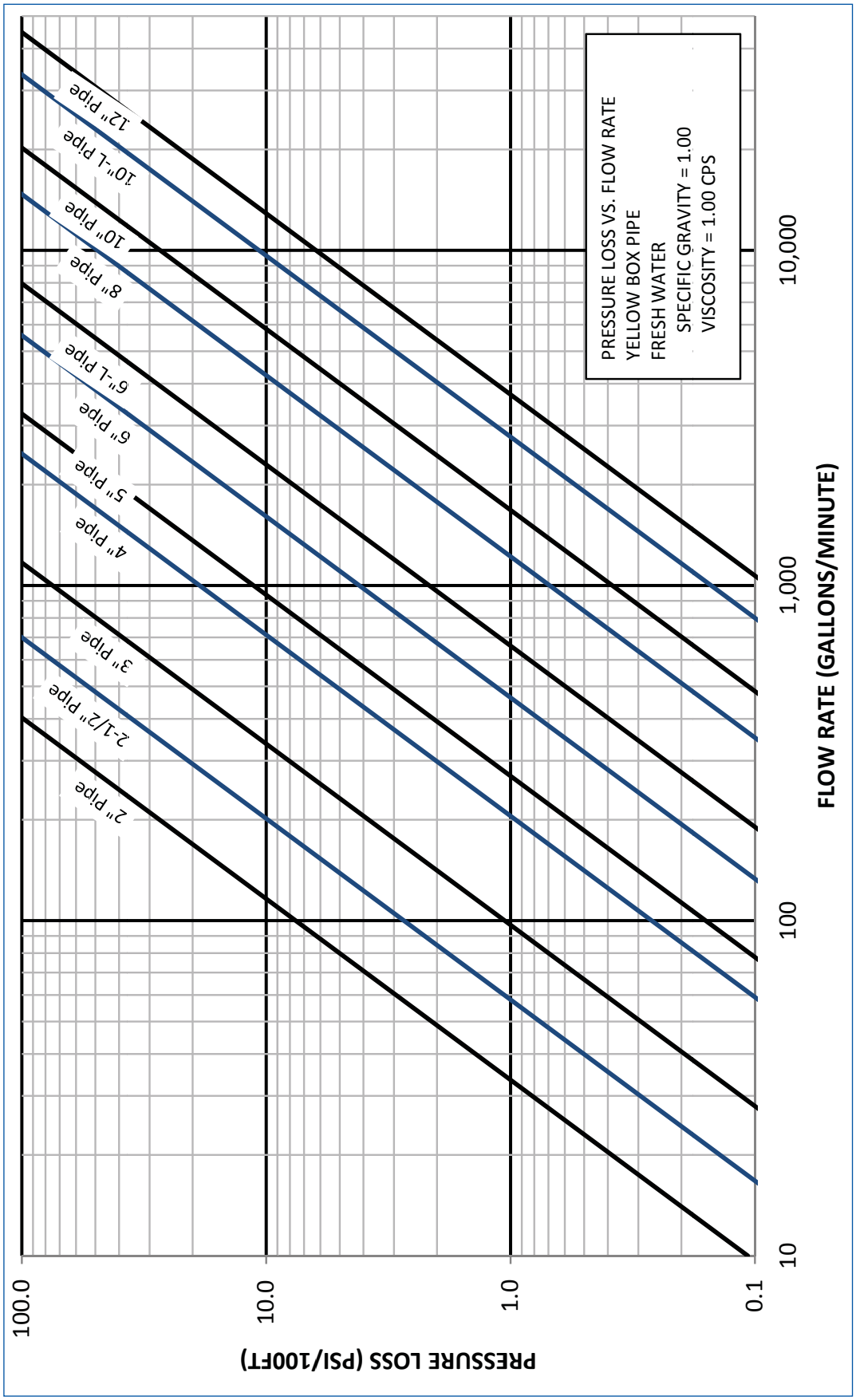
PRESSURE LOSS VS. FLOW RATE
YELLOW BOX PIPE
FRESH WATER
SPECIFIC GRAVITY = 1.00
VISCOSITY = 1.00 CPS
2" pipe
2-1/2" pipe
3" pipe
4" pipe
5" pipe
6" pipe
6"-L pipe
8" pipe
10" pipe
10"-L pipe
12" pipe
100.0
10.0
1.0
0.1
PRESSURE LOSS (PSI/100FT)
10
100
1,000
10,000
FLOW RATE (GALLONS/MINUTE)

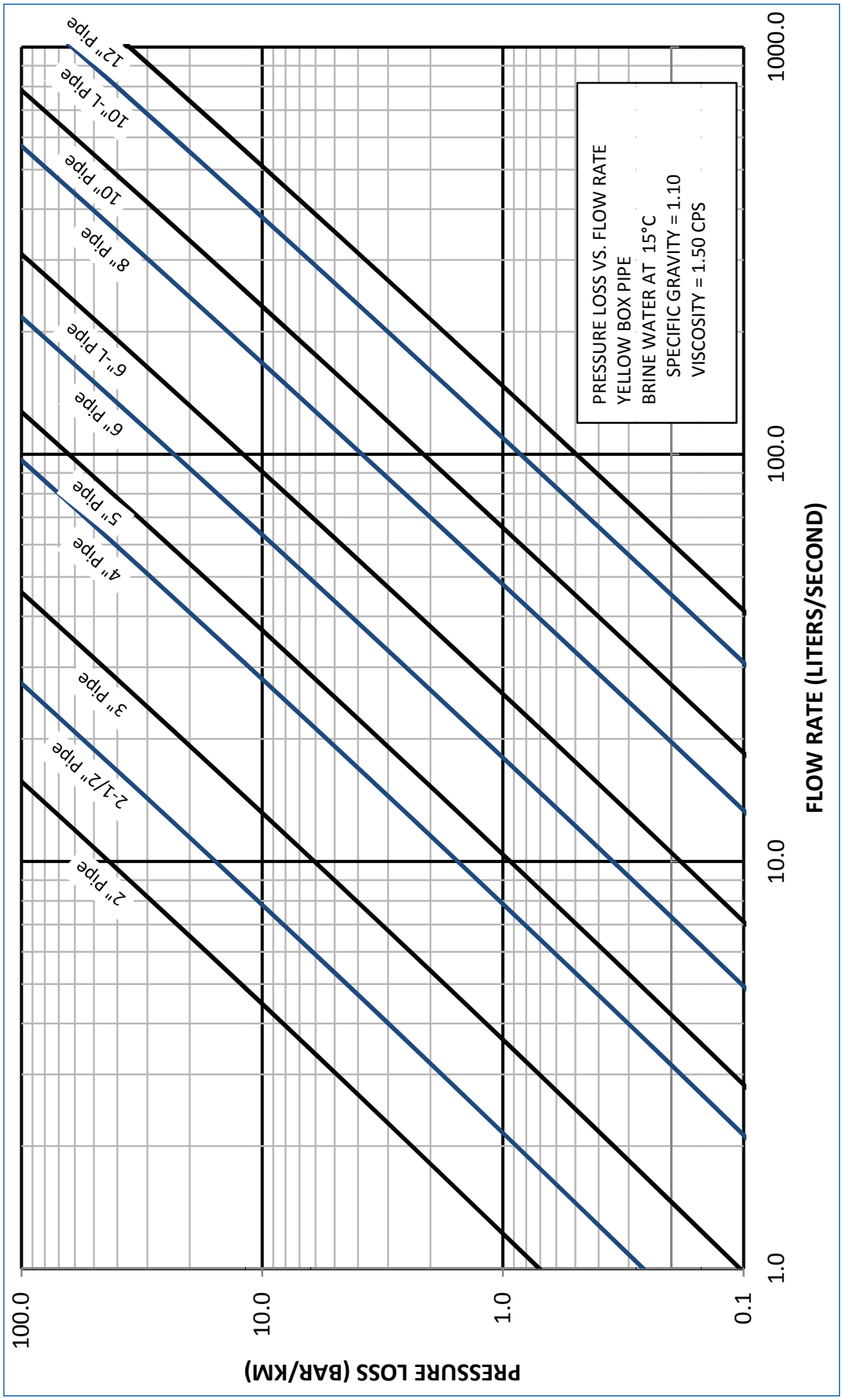
PRESSURE LOSS VS. FLOW RATE
YELLOW BOX PIPE
BRINE WATER AT 15°C
SPECIFIC GRAVITY = 1.10
VISCOSITY = 1.50 CPS
2" pipe
2-1/2" pipe
3" pipe
4" pipe
5" pipe
6" pipe
6"-L pipe
8" pipe
10" pipe
10"-L pipe
12" pipe
100.0
10.0
1.0
0.1
PRESSURE LOSS (BAR/KM)
1.0
10.0
100.0
1000.0
FLOW RATE (LITERS/SECOND)

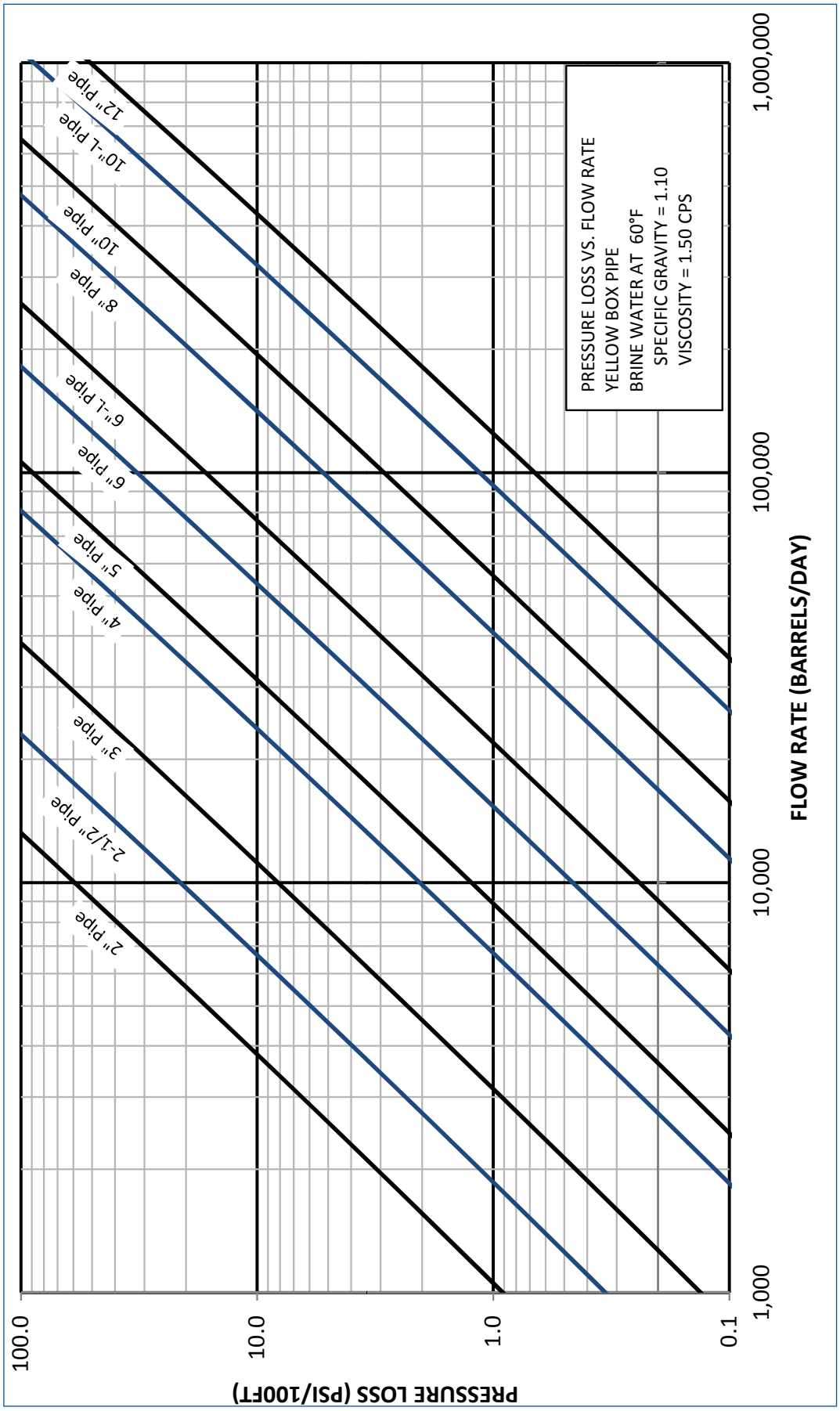
PRESSURE LOSS VS. FLOW RATE
YELLOW BOX PIPE
BRINE WATER AT 60°F
SPECIFIC GRAVITY = 1.10
VISCOSITY = 1.50 CPS
2" pipe
2-1/2" pipe
3" pipe
4" pipe
5" pipe
6" pipe
6"-L pipe
8" pipe
10" pipe
10"-L pipe
12" pipe
100.0
10.0
1.0
0.1
PRESSURE LOSS (PSI/100FT)
1,000
10,000
100,000
1,000,000
FLOW RATE (BARRELS/DAY)

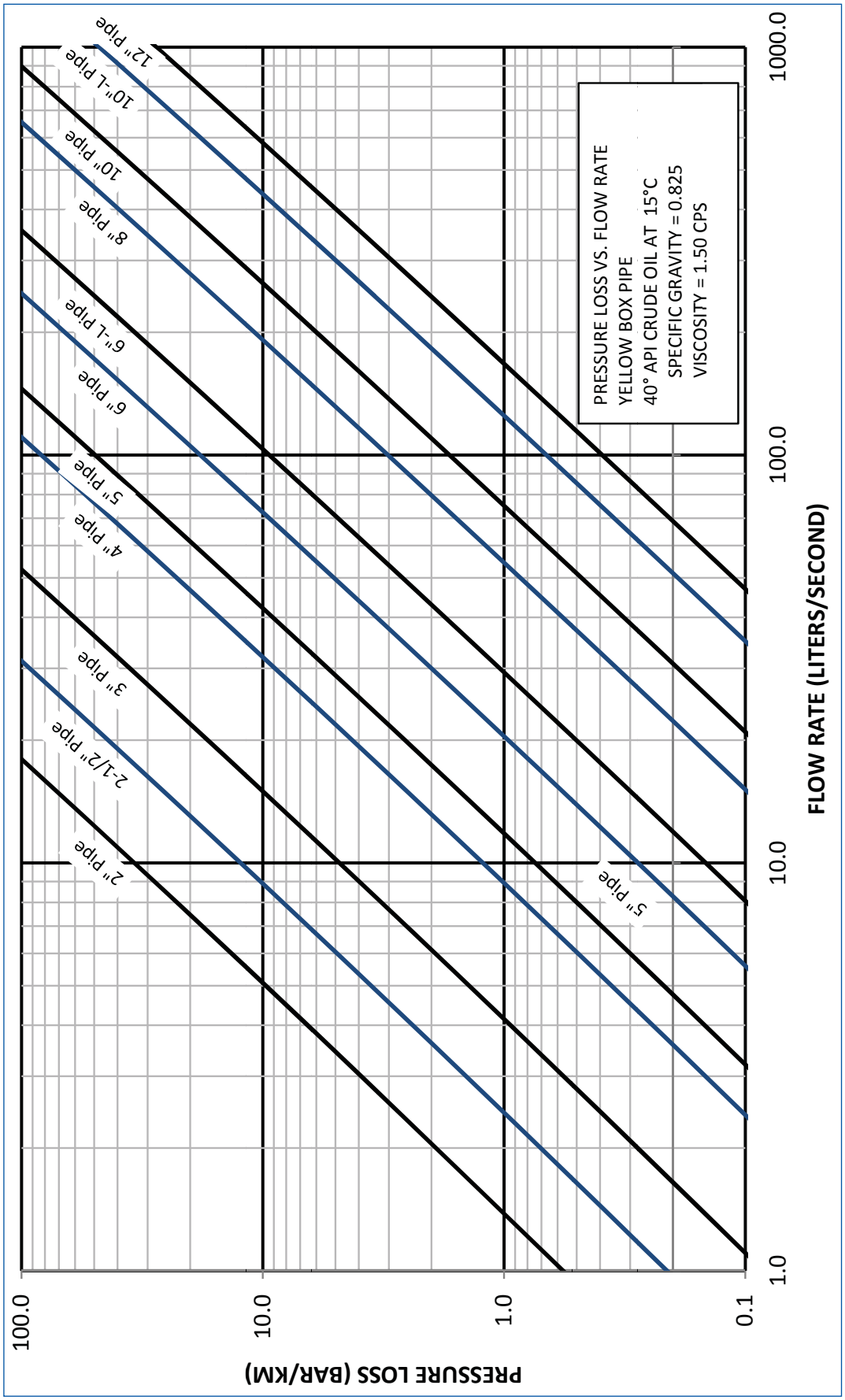
PRESSURE LOSS VS. FLOW RATE
YELLOW BOX PIPE
40° API CRUDE OIL AT 15°C
SPECIFIC GRAVITY = 0.825
VISCOSITY = 1.50 CPS
2" pipe
2-1/2" pipe
3" pipe
4" pipe
5" pipe
6" pipe
6"-L pipe
8" pipe
10" pipe
10"-L pipe
12" pipe
5" pipe
PRESSURE LOSS (BAR/KM)
100.0
10.0
1.0
0.1
FLOW RATE (LITERS/SECOND)
1.0
10.0
100.0
1000.0

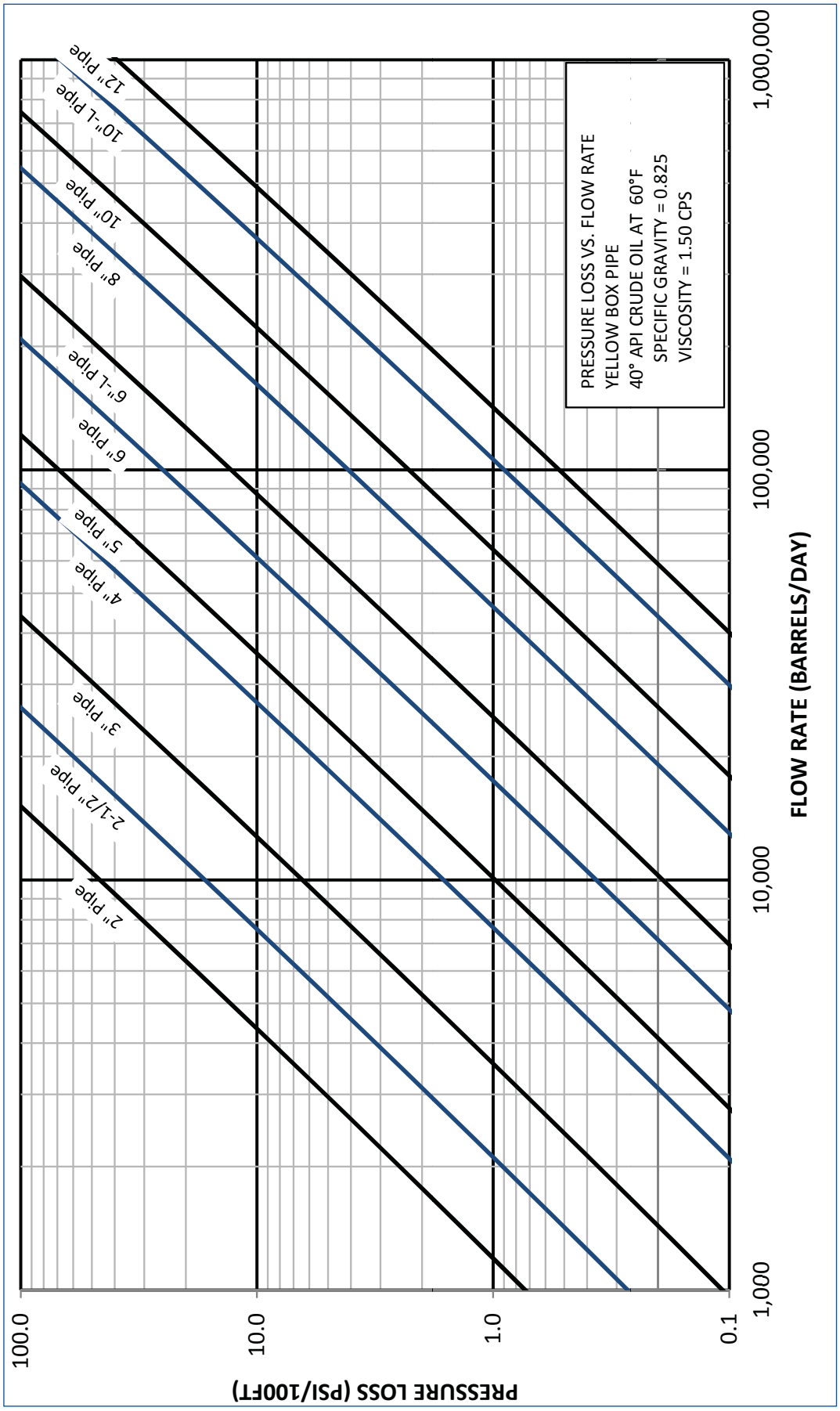
PRESSURE LOSS VS. FLOW RATE
YELLOW BOX PIPE
40° API CRUDE OIL AT 60°F
SPECIFIC GRAVITY = 0.825
VISCOSITY = 1.50 CPS
2" pipe
2-1/2" pipe
3" pipe
4" pipe
5" pipe
6" pipe
6"-L pipe
8" pipe
10" pipe
10"-L pipe
12" pipe
PRESSURE LOSS (PSI/100FT)
100.0
10.0
1.0
0.1
FLOW RATE (BARRELS/DAY)
1,000
10,000
100,000
1,000,000

10 TRUCK LOAD AND CONTAINER LOAD ESTIMATES

YELLOW BOX® API Line Pipe (Joints & Feet per Truckload)													
Size	500	750	1,000	1,250	1,500	1,750	2,000	2,250	2,500	2,750	3,000	3,250	3,500
2	1,020	1,020	1,020	1,020	1,020	1,020	1,020	1,020	945	835	755	-	-
	30,600	30,600	30,600	30,600	30,600	30,600	30,600	30,600	28,350	25,050	22,650	-	-
2.5	690	690	690	690	690	690	690	650	570	510	415	-	-
	20,700	20,700	20,700	20,700	20,700	20,700	20,700	19,500	17,100	15,300	12,450	-	-
3	530	530	530	530	530	530	530	505	450	400	315	-	-
	15,900	15,900	15,900	15,900	15,900	15,900	15,900	15,150	13,500	12,000	9,450	-	-
4	300	300	300	300	300	300	265	215	195	175	-	-	-
	9,000	9,000	9,000	9,000	9,000	9,000	7,950	6,450	5,850	5,250	-	-	-
5	200	200	200	200	200	200	200	200	180	165	-	-	-
	6,000	6,000	6,000	6,000	6,000	6,000	6,000	6,000	5,400	4,950	-	-	-
6	120	120	120	120	120	120	120	110	100	-	-	-	-
	3,600	3,600	3,600	3,600	3,600	3,600	3,600	3,300	3,000	-	-	-	-
6-L	120	120	120	120	120	120	120	120	120	-	-	-	-
	3,600	3,600	3,600	3,600	3,600	3,600	3,600	3,600	3,600	-	-	-	-
8	64	64	64	64	64	64	64	64	64	-	-	-	-
	1,920	1,920	1,920	1,920	1,920	1,920	1,920	1,920	1,920	-	-	-	-
10	56	56	56	56	56	56	56	56	-	-	-	-	-
	1,680	1,680	1,680	1,680	1,680	1,680	1,680	1,680	-	-	-	-	-
10-L	49	49	49	49	49	49	-	-	-	-	-	-	-
	1,470	1,470	1,470	1,470	1,470	1,470	-	-	-	-	-	-	-
12	36	36	36	36	-	-	-	-	-	-	-	-	-
	1,080	1,080	1,080	1,080	-	-	-	-	-	-	-	-	-

YELLOW BOX® API Line Pipe (Joints & Feet per Container)													
Size	500	750	1,000	1,250	1,500	1,750	2,000	2,250	2,500	2,750	3,000	3,250	3,500
2	825	825	825	825	825	825	825	825	765	677	611	-	-
	24,750	24,750	24,750	24,750	24,750	24,750	24,750	24,750	22,950	20,310	18,330	-	-
2.5	623	623	623	623	623	623	623	578	507	454	371	-	-
	18,690	18,690	18,690	18,690	18,690	18,690	18,690	17,340	15,210	13,620	11,130	-	-
3	405	405	405	405	405	405	405	384	342	305	240	-	-
	12,150	12,150	12,150	12,150	12,150	12,150	12,150	11,520	10,260	9,150	7,200	-	-
4	255	255	255	255	255	254	224	183	165	149	-	-	-
	7,650	7,650	7,650	7,650	7,650	7,620	6,720	5,490	4,950	4,470	-	-	-
5	173	173	173	173	173	173	173	173	157	140	-	-	-
	5,190	5,190	5,190	5,190	5,190	5,190	5,190	5,190	4,710	4,200	-	-	-
6	90	90	90	90	90	90	90	83	75	-	-	-	-
	2,707	2,707	2,707	2,707	2,707	2,707	2,707	2,481	2,256	-	-	-	-
6-L	89	89	89	89	89	89	89	89	89	-	-	-	-
	2,670	2,670	2,670	2,670	2,670	2,670	2,670	2,670	2,670	-	-	-	-
8	56	56	56	56	56	56	56	56	56	-	-	-	-
	1,680	1,680	1,680	1,680	1,680	1,680	1,680	1,680	1,680	-	-	-	-
10	42	42	42	42	42	42	42	42	-	-	-	-	-
	1,260	1,260	1,260	1,260	1,260	1,260	1,260	1,260	-	-	-	-	-
10-L	41	41	41	41	41	41	-	-	-	-	-	-	-
	1,230	1,230	1,230	1,230	1,230	1,230	-	-	-	-	-	-	-
12	30	30	30	30	-	-	-	-	-	-	-	-	-
	900	900	900	900	-	-	-	-	-	-	-	-	-

YELLOW BOX® Line Pipe (Joints & Feet per Truckload)													
Size	500	800	1,000	1,250	1,500	1,750	2,000	2,250	2,500	2,750	3,000	3,250	3,500
2	1,020	1,020	1,020	1,020	1,020	1,020	1,020	1,020	1,020	1,020	965	880	795
	30,600	30,600	30,600	30,600	30,600	30,600	30,600	30,600	30,600	30,600	28,950	26,400	23,850
2.5	690	690	690	690	690	690	690	690	690	640	580	530	440
	20,700	20,700	20,700	20,700	20,700	20,700	20,700	20,700	20,700	19,200	17,400	15,900	13,200
3	530	530	530	530	530	530	530	530	530	500	455	415	330
	15,900	15,900	15,900	15,900	15,900	15,900	15,900	15,900	15,900	15,000	13,650	12,450	9,900
4	300	300	300	300	300	300	300	300	290	265	220	-	-
	9,000	9,000	9,000	9,000	9,000	9,000	9,000	9,000	8,700	7,950	6,600	-	-
5	200	200	200	200	200	200	200	200	200	200	185	-	-
	6,000	6,000	6,000	6,000	6,000	6,000	6,000	6,000	6,000	6,000	5,550	-	-
6	120	120	120	120	120	120	120	120	120	110	-	-	-
	3,600	3,600	3,600	3,600	3,600	3,600	3,600	3,600	3,600	3,300	-	-	-
6-L	120	120	120	120	120	120	120	120	120	120	-	-	-
	3,600	3,600	3,600	3,600	3,600	3,600	3,600	3,600	3,600	3,600	-	-	-
8	64	64	64	64	64	64	64	64	64	64	-	-	-
	1,920	1,920	1,920	1,920	1,920	1,920	1,920	1,920	1,920	1,920	-	-	-
10	56	56	56	56	56	56	56	56	56	-	-	-	-
	1,680	1,680	1,680	1,680	1,680	1,680	1,680	1,680	1,680	-	-	-	-
10-L	49	49	49	49	49	49	49	-	-	-	-	-	-
	1,470	1,470	1,470	1,470	1,470	1,470	1,470	-	-	-	-	-	-
12	36	36	36	36	36	-	-	-	-	-	-	-	-
	1,080	1,080	1,080	1,080	1,080	-	-	-	-	-	-	-	-

YELLOW BOX® Line Pipe (Joints & Feet per Container)													
Size	500	800	1,000	1,250	1,500	1,750	2,000	2,250	2,500	2,750	3,000	3,250	3,500
2	825	825	825	825	825	825	825	825	825	825	779	712	644
	24,750	24,750	24,750	24,750	24,750	24,750	24,750	24,750	24,750	24,750	23,370	21,360	19,320
2.5	623	623	623	623	623	623	623	623	623	569	516	471	390
	18,690	18,690	18,690	18,690	18,690	18,690	18,690	18,690	18,690	17,070	15,480	14,130	11,700
3	405	405	405	405	405	405	405	405	405	383	349	317	251
	12,150	12,150	12,150	12,150	12,150	12,150	12,150	12,150	12,150	11,490	10,470	9,510	7,530
4	255	255	255	255	255	255	255	255	248	224	187	-	-
	7,650	7,650	7,650	7,650	7,650	7,650	7,650	7,650	7,440	6,720	5,610	-	-
5	173	173	173	173	173	173	173	173	173	173	160	-	-
	5,190	5,190	5,190	5,190	5,190	5,190	5,190	5,190	5,190	5,190	4,800	-	-
6	90	90	90	90	90	90	90	90	90	83	-	-	-
	2,707	2,707	2,707	2,707	2,707	2,707	2,707	2,707	2,707	2,481	-	-	-
6-L	89	89	89	89	89	89	89	89	89	89	-	-	-
	2,670	2,670	2,670	2,670	2,670	2,670	2,670	2,670	2,670	2,670	-	-	-
8	56	56	56	56	56	56	56	56	56	56	-	-	-
	1,680	1,680	1,680	1,680	1,680	1,680	1,680	1,680	1,680	1,680	-	-	-
10	42	42	42	42	42	42	42	42	42	-	-	-	-
	1,260	1,260	1,260	1,260	1,260	1,260	1,260	1,260	1,260	-	-	-	-
10-L	41	41	41	41	41	41	41	-	-	-	-	-	-
	1,230	1,230	1,230	1,230	1,230	1,230	1,230	-	-	-	-	-	-
12	30	30	30	30	30	-	-	-	-	-	-	-	-
	900	900	900	900	900	-	-	-	-	-	-	-	-