FLEXSTRONG™

Thermoplastic Composite Pipe (TCP)

INSTALLATION MANUAL

FUTURE PIPE INDUSTRIES

www.futurepipe.com

FLEXSTRONG™

THERMOPLASTIC COMPOSITE PIPE (TCP)
INSTALLATION MANUAL

Document number: FX-TCD-001 Rev.2
Date issued: 16 May 2022

TERMS OF USE

All information was correct at the time of publication. However, we reserve the right to alter, amend and update any of the products, systems and services described in this brochure.

We accept no responsibility for the interpretation of statements made.

Occasionally, Future Pipe Industries will provide updates to this catalogue. In order to assure that the reader is using the most current version, please visit our website at www.futurepipe.com

TABLE OF CONTENTS

1. INTRODUCTION

This document explains various aspects of the installation of the Flexstrong™ pipeline- a spoolable pipeline. The adherence to the requirements, methods, and recommendations given in this guide will contribute to a successful installation and operation. It is essential to have skilled labor for the quality execution of the installation activity.

Besides, the contractor may consult FPI representative for any clarification of statements made in this document. Any specific problem, which would be encountered on-site must be investigated and resolved on a case-by-case basis.

Definition of words used in these instructions:
The word "shall" indicate a requirement.
The word "should" indicate a recommendation.

1.1 General Product Description of Flexstrong™

Flexstrong™ is a spoolable, high strength, Reinforced Thermoplastic Pipeline (RTP). It offers a solution for a broad range of applications. Flexstrong™ maintains a fully bonded wall that yields higher impact resistance and eliminates the concern for permeation into interstitial space, enhancing the overall pipe integrity.

Flexstrong™ consists of three essential layers, including a thermoplastic (HDPE) liner, helically wrapped HDPE, a continuous fiber high-strength reinforced thermoplastic composite (CF-RTP) tape and, an external thermoplastic jacket layer.

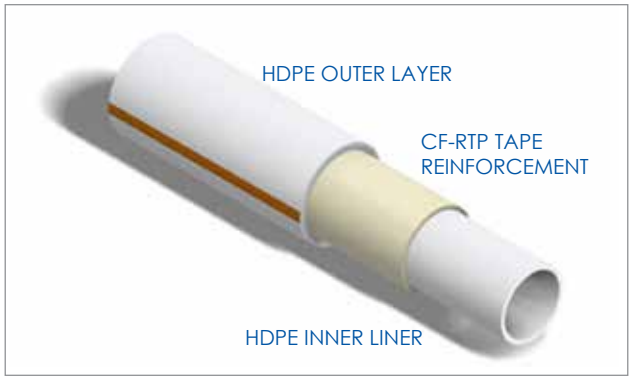

Figure 1: Cross-sectional view of Flexstrong™ product

1.2 Product Identification

As shown in Figure 2, Flexstrong™ product marked with the following details:

- Manufacturer name and Trademark
- Nominal pipe size in millimeters (mm) or inches (in)
- Pressure rating
- Product identifiers, stipulating product capability and traceability

Figure 2: Typical marks on Flexstrong™

2. REFERENCES

- FPI standard know-how documents
- API 15S

3. MATERIALS, TOOLS & CONSUMABLES

3.1 Materials

- Pipe-to-pipe coupling*
- Flange-end connector*
- Weld-end connector*

3.2 Tools

- Swaging or Crimping Kit* (Per the offered product)
- ID, and OD Peeler
- Forklift, cranes, etc
- A-Frame or Deployment Trailer (Optional)

3.3 Consumables

- MOLYKOTE™.
- Lithium Complex Grease.
- Rubber gloves, working gloves, safety goggles, etc.
- Overalls, safety shoes, safety helmet, etc.
- Cleaning rags.

* To be supplied by the Future Pipe Industries Ltd.

4. EQUIPMENT

The following are the equipment needed while deploying and connecting Flexstrong™ products; Reels, A-Frame, Pulling Devices, Crimping kit, and Swaging Kit. Future Pipe Industries will supply those items.

Equipment	Illustrations
Reel Flexstrong™ pipeline is typically packaged and shipped on steel reels designed to spool the required length of pipeline. The length of pipe per reel varies depending on the pipe diameter and dimensions of the reel.	 
A-Frames An A-frame is a spooling frame suitable for supporting and controlling the reel of the pipeline. The design of the A-frame should be suitable to hold the reel and to facilitate the rotation/unspooling of the pipeline in a controlled and safe manner. Ideally, the A-frame should: • Support the reel off the ground allowing it to rotate in a controlled fashion. • Have an integral braking device that allows the operator to maintain tension on the pipeline as it is pulled off the reel. • Have spacers to Centre the reel onto the A-frame. • Be positioned as close to the ground as possible to minimize the overturning moment of the top-heavy reel.	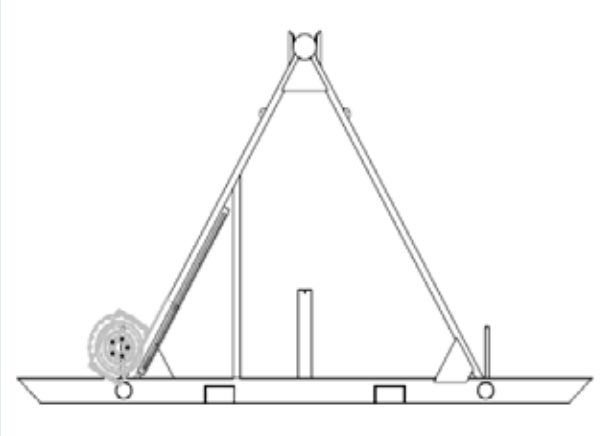
Pulling Devices The pulling devices must be capable of "accommodating" the predicted load and have a rated working load approximately equal to the maximum allowable tensile strength of the pipeline being installed.	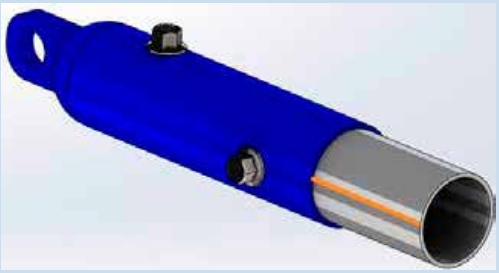
Swaging Machine The swaging machine consists of moving arm and hydraulic mechanism that perform the swaging process. Part of Swaging Kit.	

Equipment	Illustrations
Swaging Dies The swaging dies are installed on the swaging machine arm to perform the swaging operation and achieve the desired compression. Swaging dies consist of two identical pieces. The size of the swaging dies to be used depends on the diameter and pressure class of the pipe. Part of Swaging Kit.	
Insertion Clamps The insertion clamps are used to grip on the pipe and maintain the roundness and robustness during the insertion process. Part of Swaging Kit.	
Power Pack The gasoline operated hydraulic power supply Part of swaging kit.	
Horseshoe Holder The horseshoe holder is a component that holds the steel fitting in place while performing the swaging process. Part of Swaging Kit.	

Equipment	Illustrations
Expansion Machine The expansion machine is used to expand the stem of the fitting. This is to push the inner sleeve of the steel fitting to fully engage with the inner portion of the pipe. Part of Crimping Kit.	
Crimping Machine This machine is used to perform the last step of the connection process which is: compressing the outer sleeve of the fitting. Part of Crimping Kit.	
Insertion Clamps The insertion clamps are used to grip to the pipe and maintain the roundness and robustness during the insertion process. Part of Crimping Kit.	
Expansion Dies The expansion dies(dolly) are used to expand the inner sleeve of the fitting during the expanding process. Part of Crimping Kit.	

Equipment	Illustrations
Crimping Jaws The crimping jaws are used to compress the outer sleeve of the fitting during the crimping process. Jaw size depends on the pipe diameter.	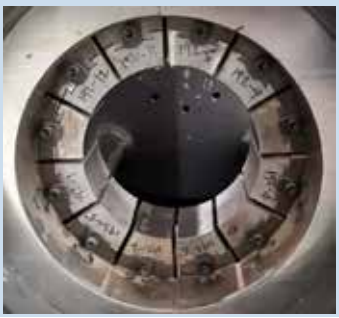
Holding Plates The holding plates hold the fittings in place during the expanding process. Part of Crimping Kit.	
Pipe ID and OD Peeler The pipe peeler is used to peel the pipe inner or outer diameter if required, to suit the fitting's design dimensions.	  
Pipe Jacket Stripper/Cutter This is used to remove a portion of jacket to serve as vent for any gas accumulated within the structure (if any).	

5. TRANSPORT, HANDLING & STORAGE

While Flexstrong™ pipeline is very flexible, it will retain a small amount of stored elastic energy when coiled on the reel. The free end of the spooled pipeline is tightened during transportation. It will prevent injury to the people, damage to the pipe, or the equipment. Improper handling of the reels can cause harm, and damage to the product. Always ensure that the lifting equipment used while handling, the straps, slings, and spreader bars are adequate for the load and loading conditions. Ensure that the equipment operators have received complete and proper training in handling of Flexstrong™ pipeline.

5.1 Transporting of Flexstrong™ Reels

Transportation of Flexstrong™ Reels on a trailer should be mounted as close to the ground as possible. All equipment such as chains, slings, and spreader bars must be inspected and should be available on site and must be in a good condition. Loading and positioning of the reels on the vehicle must always be done with utmost care. The chains or slings attached should be properly fastened to the vehicle and the reels to prevent any movement during the transport.

When loading on the truck, reels must be "chocked" using wooden wedges on each side to avoid any rolling movement. Three chains or slings must be placed: one at each side of the reel and one placed through the drum of the reel and tied tightly to the trailer.

The speed of the vehicle should be carefully controlled, especially during turns. Upright reels are "top-heavy" and can easily be overturned. During the transport, the speed of the vehicle should be controlled, and the turns shall be handled with care. Reels may be moved for short distances using a crane and a sling.

Figure 3: Loaded reel for transport

MOVING REELS BY ROLLING IS NOT RECOMMENDED. Rolling the reels may become unstable and out of control. Upright reels are top-heavy and may tip over when rolling.

Figure 4: Reel loaded on the truck

5.2 Handling of Flexstrong™ Reels

Flexstrong™ pipeline requires proper handling to ensure safety and to avoid damage to the pipe or reels. The handling equipment such as forklift tines, lifting slings, and chains shall not touch the Flexstrong™ pipeline during transportation or handling.

Lifting shall be performed using a spreader beam or a steel bar across the reel for loading and unloading. Moving the reels using alternative means should be reviewed with Future Pipe Industries Field Services to avoid potential damage to personnel, reel, pipeline, or other equipment.

5.3 Lifting Using Cranes

When lifting the reels with a hanging hook, use the basic safety precautions for a suspended load. Lift a vertical reel by the spindle, not by the flange. Use a spreader beam or spreader bar when lifting the reels, as the flanges are not designed for side loads resulting from a direct hook lift.

Figure 5: Lifting of reels using spreader bar

5.4 Lifting Using Forklift

A forklift must have an adequate weightlifting capacity for lifting purposes and loading of the reels onto the A-frame. It can also facilitate short distance movement on-site. Forklift forks should be positioned at the top of the reel drum when lifting. The weight of a loaded reel must be identified while determining the appropriate size of the forklift.

Note: *Handling the reels with a fork length of 10ft or longer will facilitate proper handling without damage.*

Figure 6: Lifting the Reel vertical

5.5 Storage of Flexstrong™ Reels

The contractor must store the FlexstrongTM reels on a stabilized level ground with no protruding objects that might interfere and damage the pipe. Chock or anchor the reel to prevent it from rolling. Ensure that the holding point is on the reel's metallic part to avoid any contact with the pipe. Empty reels can be stored horizontally but should not be stacked on top of each other. Flexstrong™ **product shall be protected against humidity and end sealed using heat shrink caps or other sealing techniques**. Jointing **shall proceed immediately after removing the end seals**.

In case of storing the pipe on site, avoid the rocky and rough terrain areas to protect the pipe from sharp object/stone that can cause damage or dent.

If Flexstrong™ reels are being stored for an extended period, they should be protected from ultraviolet (UV) exposure by being covered with a **tarpaulin sheet**.

Figure 7: Short term Reel storage on-site

6. QUALITY

Flexstrong™ pipeline shall be inspected on-site against kinks, scratches, and dents. Check for any potential damage caused by reel and shipping straps. Need extra attention doing visual inspection on the last layer of the pipe in the reel near the soil. If any damage is found after unloading, record it on the checklist as this will be essential for FPI internal investigation. A**ny damage found on Flexstrong™ product shall be communicated with the pipe manufacturer to advise on necessary actions**.

Note: *Always record any damages observed, take pictures or video, and contact FPI.*

Some deformation of the Flexstrong™ product including wrinkling, bulging, or sharp dent that occur during delivery will be reported. Also, there are a few instances the reel can result in kinking of the pipe, this can occur to Flexstrong™ Products when the minimum bend radius of the product is not followed.

Repairing of Flexstrong™ pipeline is strictly not allowed. The only remedial action allowed in case damage is observed and acknowledged by the pipe manufacturer is to cut the pipe 1 meter away from the defective area, discard the part, and pull the free end to make a new connection: The length to be connected must be **straight** to avoid misaligned pipe insertion thru the fitting.

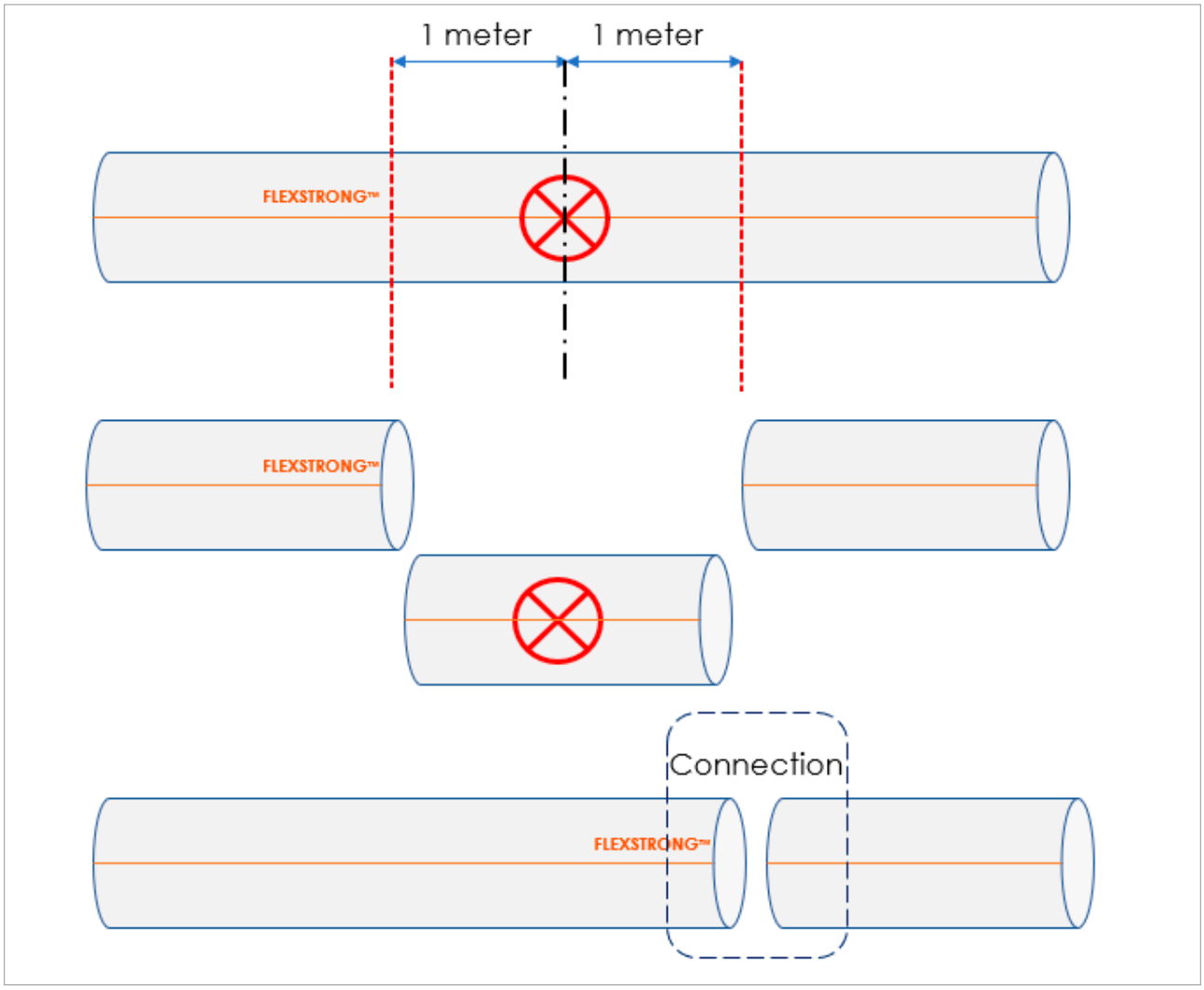

Figure 8: Repair Method

7. INSTALLATION TECHNIQUE

Flexstrong™ pipeline is designed to be stored, handled, deployed, and installed using a reel. The pipeline can be deployed using an "A – frame". A truck can be used for the on-site transport as well as unspooling activity. A crane and/or side boom can be used for the lowering activity, this will ensure the flexibility for laying long continuous lengths and to reduce the impact and possible damage during installation. A site evaluation should be performed prior to the delivery of the pipeline, tools, and equipment to have a better deployment in the field. Considering the site location and application of the pipeline, a suitable deployment method can be preferred as described in this chapter.

A-frames are commonly used during deployment. The reel can be stationary, which is a "pull-in" operation, or can be driven along the route as the pipeline is laid from a deployment trailer. The equipment and the personnel necessary to support the installation depend on the project characteristics (terrain, pipeline length, etc.).

While unspooling the Flexstrong™ pipeline, the below-mentioned methods must be followed. The maximum allowable pulling force should be followed for the safe handling of the product. A load indicator (load cell) should be fitted between Flexstrong™ pipeline and the pulling equipment so that the axial load on the pipeline is monitored. If the maximum pull load exceeds the product's puling force rating, multiple pulling devices spaced along the length of the pipeline should be used to ensure that the maximum allowable pull load is not exceeded. These multiple units must be operated at the same speed, to avoid buckling of the pipeline.

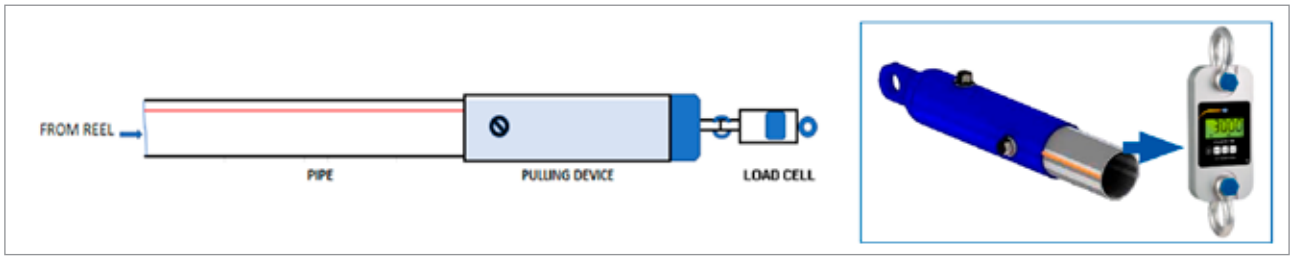

Pulling device with Load cell

Table 1: Maximum Allowable Puling Force for Flexstrong™ Products

Maximum Puling Force for Flexstrong™ Products									
Pressure Rating (psi)	**750**			**1000**			**1500**		
Nominal Size	3"	4"	6"	3"	4"	6"	3"	4"	6"
Maximum Puling Force (Ton)	1.0	1.3	2.5	1.0	1.3	2.5	1.6	2.0	3.75

Pulling force should always be maintained on the pipeline at the reel with a brake on the spooling frame, to prevent bird's nesting in several layers of a spooled pipeline. Bird nesting results when an unrestrained pipeline is free to change its spooling diameter, and there is a rapid, uncontrolled release of stored energy. Care must be exercised when removing a bird's nest from a crossed pipeline. Applying tension to pipelines that are crossed may result in pipe damage.

Note: *Pulling force should be measured on site to prevent exceeding the maximum pulling force.*

7.1 Pulling Methods

Pulling the Flexstrong™ pipeline depends on the distance and condition. FPI's field representative can advise on the suitable pulling technique for the job.

Generally, for short distances and straight pulling, a sling can be connected to the pipe by drilling a hole on the pipe body and passing the sling. While pulling more than **300 meters** of Flexstrong pipeline, where passing a curve or a corner, use a **sling roller** to minimize excessive pull force on the pipe.

For long pipeline pull or, curved pulling, a puling device shall be used for pulling Flexstrong™ pipeline to protect the integrity of the pipe's structural wall.

7.2 Unspooling from a Stationary position

To install Flexstrong™ pipeline from a stationary position, the reel is secured at one position and the pipeline is pulled off the reel. This is the preferred method for installation of Flexstrong™ in areas with relatively non-abrasive, non-rocky terrain. The equipment used to pull the Flexstrong™ pipeline must have sufficient power for the anticipated load.

Flexstrong™ pipeline may be pulled by a pickup truck, tractor, backhoe, or similar piece of construction equipment. While unspooling, keep away from sharp objects / edges, to avoid any pipe damage.

After the pull of the Flexstrong™ pipeline is complete, the section that was pulled should be cut off and discarded for at least 1m (3 ft) from the pull point.

Figure 9: Unspooling of pipeline from a stationary spooling frame

7.3 Unspooling from a Moving Reel

Flexstrong™ pipeline can also be unspooled by anchoring one end of the pipeline at the starting point (using a pulling device as described above) and hauling, lifting, or pulling the reel away from the starting point with an A-frame on a trailer or truck bed, steel track backhoe, winch truck or cherry picker (see Figure 10). This is the preferred method for installation in areas with rocky or very abrasive soil, as this approach minimizes the risk of abrasion damage to the pipeline during the installation. This is also the preferred method for pipelines that must be installed with curves. All equipment must have sufficient load capacity to safely handle the weight of the reel.

The pipeline reel represents a top-heavy load that may be prone to overturning when crossing rough terrain. An overturned load can result in an injury to the personnel and/or damage to the equipment and/or the pipeline. Be sure to evaluate the height of the centre of gravity of the equipment with the reel and ensure the pathway of the vehicle is adequately smooth, wide, and level to prevent overturning along the intended route.

Figure 10: Unspooling a pipeline from a spooling frame mounted on a trailer

7.4 Surface Laid Applications

The pipeline should be straightened and guided by sliding roller throughout the deployment near or inside the trench. Jointing and swaging should be done outside or inside the trench with enough space to move freely without stress to the pipe. After the successful connection, pipe roller, strap or support bar will be used during positioning or lowering the pipe into the trench.

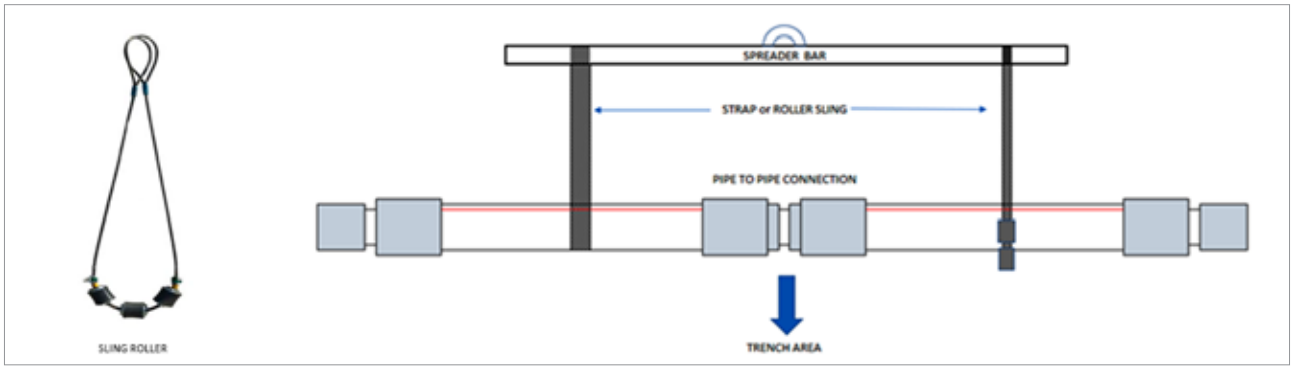

Figure 11: Mid-joint fitting with support bar

7.5 Bend and S Bend Deployment

During change of direction, supports shall adequately be placed to achieve the required angle while maintaining the minimum allowable bending radius (see Table 2). All curves in the Flexstrong™ pipeline require a minimum of two contact points with roller guides. T**he maximum angle between two consecutive supports shall be limited to 30 degrees to avoid the formation of bends below the minimum bending radius**. See figure 12.

In term of deployment thru a curve or bend, place straight the pipe near the trench. Then push/drag carefully the pipeline towards the trench, and slowly lower it into the trench, using roller and support bar strap or sling. In case of an obstruction, you need to push the pipe inside the trench with extra support and within the maximum allowable bend radius (Table 2).

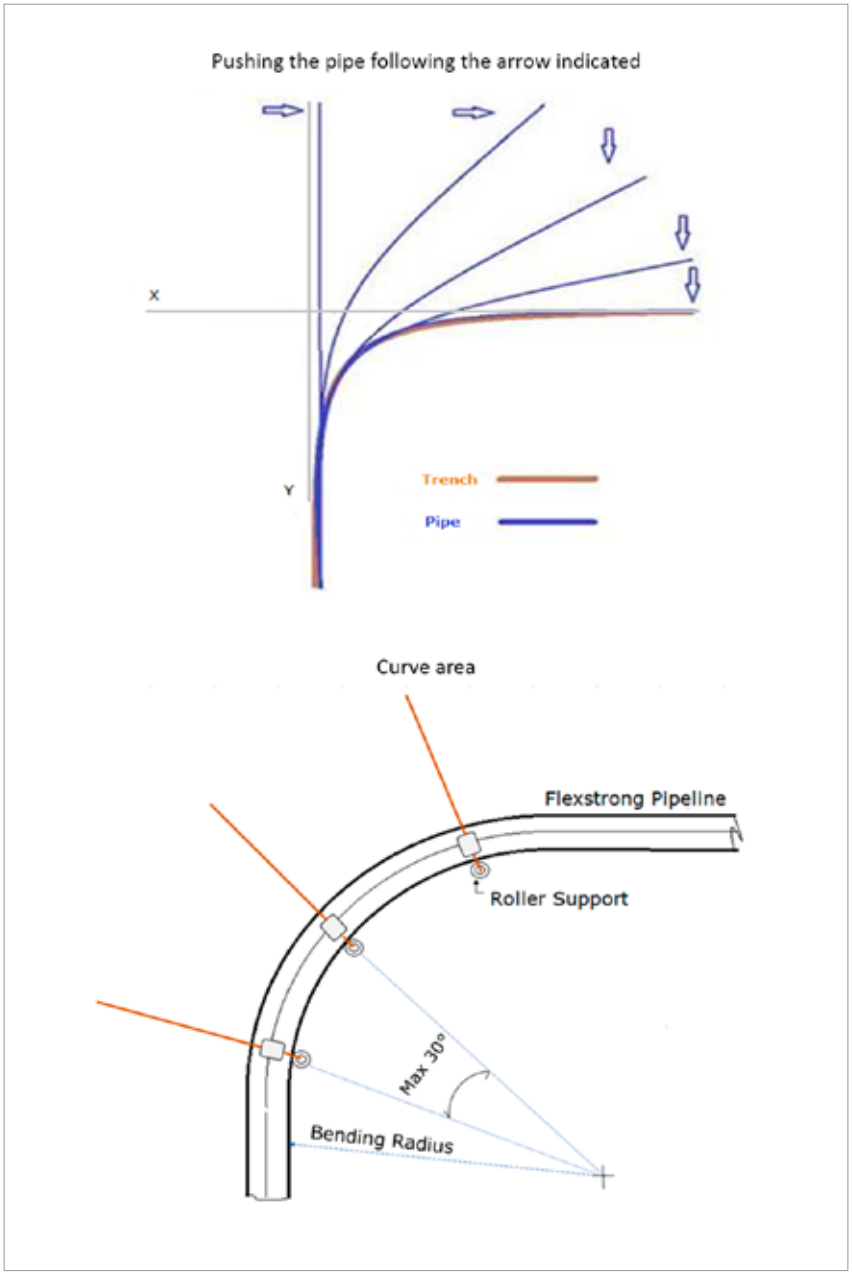

Figure 12: Typical Bend Details

7.6 Surface Laid Applications

Surface laid application is the methodology where the pipelines are being laid on the surface of the loose sand and soft terrain following the natural grade elevation. **The surface shall be clear from any sharp edges/rocks and abrasive soil to avoid point loads and abrasion. A detailed evaluation of the system shall be conducted to propose necessary additional recommendations if any**.

The surface laid pipelines shall be routed in a manner that no excessive movement occurs on the pipes because of thermal expansion and/or contraction, internal pressure, and other design loads. The axial and lateral expansions should be prevented by putting pipe support.

Flexstrong™ pipeline shall be properly supported at intervals no longer than 150m using berms, sandbags, guide supports or any other proper means of support. The excessive movement of Flexstrong™ pipeline shall be avoided while pressurizing, operating, or depressurizing the pipe. All bends, mid joint, and proximity to the joints shall also be supported properly.

If the surface laid pipeline to be secured by means of berms, the height and length of the berm should be 1m and 4m, respectively. Project-specific details should be referred for the implementation of the right recommendation based on the terrain topography.

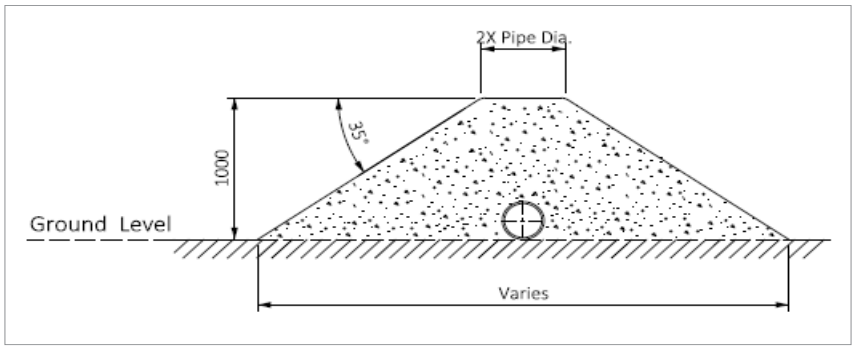

Figure 13: Cross-sectional view of berm support

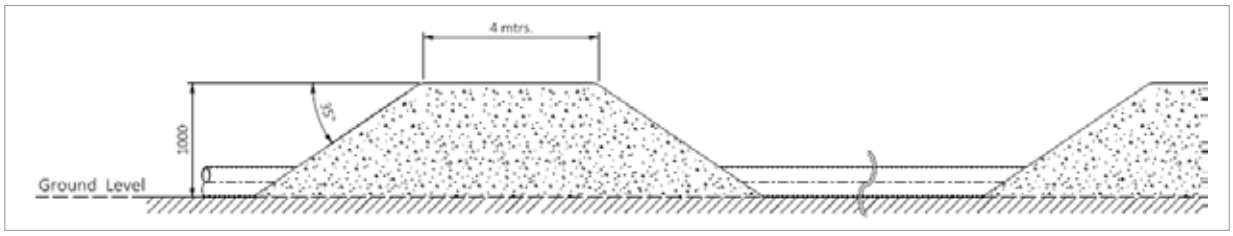

Figure 14: Elevation view of berm support.

Note: *Precautionary warning measures shall be provided throughout the entire length of the pipeline. These measures include, and are not limited to,* ***warning signs, lights, tapes, and cones****.*

7.7 Road Crossings

7.7.1 Steel Sleeves

- **At road crossings, Flexstrong™ pipeline shall be laid through a sleeve and shall have a depth of cover not less than 4 feet (1.2 m).**
- **The sleeve internal diameter shall be large enough to facilitate the installation of the carrier pipe and to prevent the transfer of external loads to the carrier pipe**. The sleeve ID should be minimum 2 pipe sizes higher than that of the carrier pipe for an easy installation.
- **The ends of the sleeve shall be sealed with flexible end seals to prevent the entry of the foreign matter inside the sleeve**.

7.7.2 Relief slabs

- At locations of low intensity crossings such as livestock crossings, or camel crossings, relief slabs can be used to protect the pipe from external loads. Project specific relief slab details shall be followed for each project.

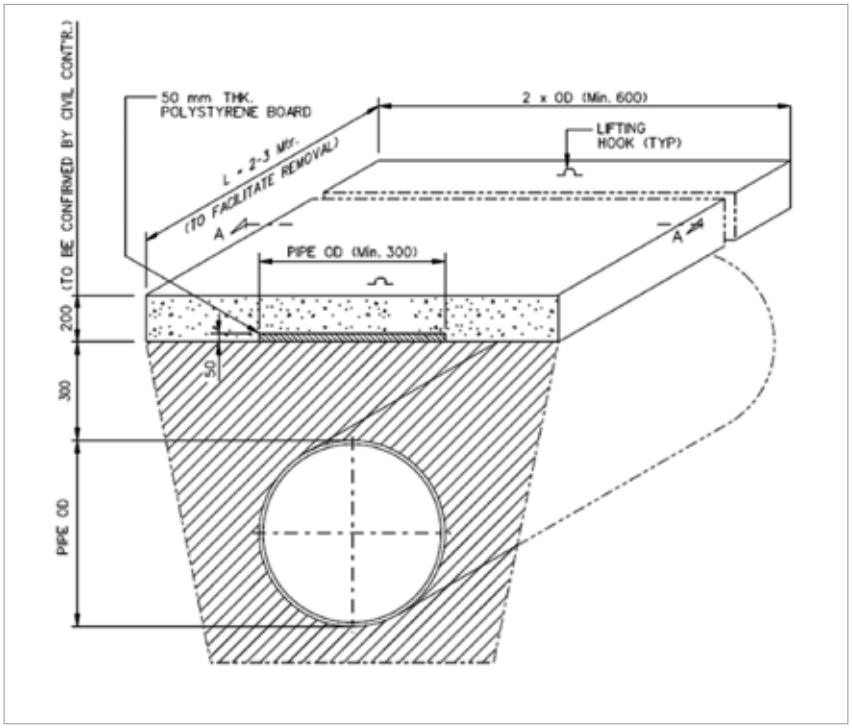

Figure 15: Pipe under the Relief Slab

7.8 Pipe/Cable Crossings

In case of pipe or cable crossing, the pipeline should be deployed using a static A-Frame instead of the moving reel method. Pushing the pipe passing the crossing instead of pulling it would be the best option.

Figure 16: Trench under cable line

7.9 Pulling Through Steel Sleeve

Flexstrong™ pipeline can be pulled through sleeves, generally, carbon steel pipes, as a remedial solution for an existing failing line or as casing for Flexstrong™ pipeline. **Adequate clearance between the inner diameter of the steel sleeve and the outer diameter of the Flexstrong™ pipeline shall be provided to facilitate the pulling job**.

- **Flexstrong™ pipeline shall not be pulled inside any fitting or curvature of radius less than the minimum allowable bending radius of Flexstrong™ pipeline (see Table 2)**.
- It is highly recommended to pull a Flexstrong™ pipeline test piece, with a length of 10 meters (33 ft), through the steel sleeve to verify that the inside of the steel sleeve is free from obstructions.
- Flexstrong™ pipeline can be pulled through the sleeve following the steps in clause 7 if the test piece successfully passes through the entire steel sleeve without any damage and without applying excessive pulling forces.
- **The inner side of the steel sleeve shall be free of obstacles and sharp bodies, cleaned using suitable pigs, and using sizing guides/plates to confirm the size of the sleeves before the beginning of the pulling job**.
- For further connection after the steel sleeve, the Flexstrong pipe should be cut at least 1 meter (3 feet) away from the sleeve edge.

7.10 Buried Pipelines

For buried installations, consideration must be given to the method of attachment to the surface equipment. This is particularly critical in areas subject to soil movement or heave. The transition from ditch to riser must be on a gentle slope with mechanical support.

Proper construction of trench is important. Trenches should be constructed according to the following guidelines:

- Generally, the trench must have bedding and cover depth of a minimum of 150 mm.
- Trenches must have a minimum width of 300 mm in addition to the pipe diameter, or wide enough to accommodate the multiple Flexstrong™ pipelines, and other pipelines, and should be as straight as possible.
- **Pipelines shall be laid in the middle of the trench, to avoid scratches and damages when contacting the trench wall**.
- Avoid sharp bends and abrupt changes in elevation of the line. Always respect the minimum bending radius in both horizontal and vertical planes.

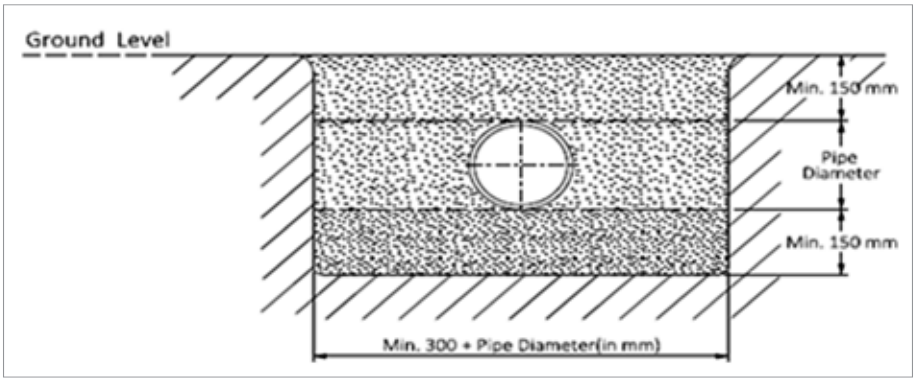

Figure 17: Trench configuration

Table 2: Minimum Allowable Bending Radius for Flexstrong™ Products

Minimum Bending Radius for Flexstrong™ Products									
Pressure Rating (psi)	**750**			**1000**			**1500**		
Nominal Size	3"	4"	6"	3"	4"	6"	3"	4"	6"
Min. Bending Radius (Meters)	2.39	3.1	4.53	2.39	3.1	4.53	2.45	3.16	4.62
Min. Bending Radius (ft)	7.84	10.17	14.86	7.84	10.17	14.86	8.04	10.37	15.16

The bottom of the trench should be as uniform as possible and provide a smooth, firm bearing surface to support the bottom quarter of the pipe circumference. This is often accomplished by healing the bottom of the trench with a hoe bucket. High spots in the trench bottom can cause uneven bearing on the pipe, damage due to localized stress during backfill, and unnecessary wear at these points.

- It is important to remove all sharp rocks (larger than 50 mm) and other abrasive material from the trench bottom.
- The pipe should be properly supported to prevent low spots, traps, or sumps.
- If the trench is excavated through rock or shale ledges, or through unstable soil, dig the trench slightly deeper. Use a minimum of six inches of river sand or other clean backfill such as pea-gravel in the bottom of the trench and over the pipe to protect the pipe from rocks.
- If multiple lines are installed in the same trench, they should be separated by a distance (A) of at least six inches (**150 mm**) or one pipe diameter, whichever is greater. This is particularly important if any lines in the trench will experience pulsation or movement.

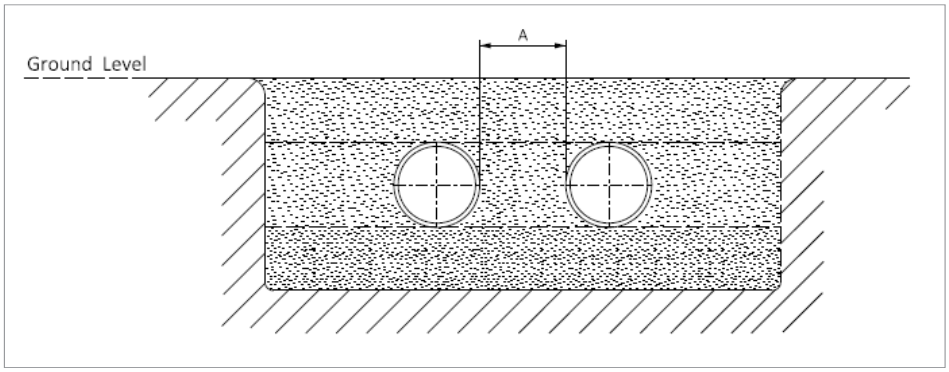

Figure 18: Multiple lines installed in the same trench

Before backfilling the trench, make sure the pipeline is properly positioned and that any tools or positioning jigs used during the installation are removed from the trench. Connections and joints should be left exposed for inspection during hydro testing. The trench should be backfilled as soon as possible after hydrostatic testing to eliminate the chance of damage to the pipeline, floating if the trench floods, or shifting due to trench collapse. It is recommended that the material to be used as backfill for Flexstrong™ pipeline be free from rocks, boulders, large clods of dirt, frozen dirt, and other objects that could damage the pipe.

Caution should be taken to prevent voids (areas that do not contain backfill) under or around the pipe. If frozen earth is used as backfill, it will eventually thaw and contract, leaving the pipe with insufficient supports and voids around the pipe. Remove frozen lumps (solid lumps) from all backfill materials before backfilling. For trenches excavated under roads or under structures, place backfill in 6-inch (150 mm) layers till grade level and compact each layer to at least 95% of maximum Standard Proctor Density. When compacting, avoid causing damage to the pipe. Vibrating tampers should not be used until there is at least one foot (300 mm) of backfill over the pipe

7.11 Buried Pipelines Berms

For projects where pipeline's trenches to be covered with berms, borrow soil covered with an environmentally friendly soil stabilization chemical or marl must be used. The height of the berm shall be 750 mm with side slopes of 35 degrees. The width at the top of the berm shall be equal to two times the pipe diameter. If marl to be used as cover, the thickness of Marl layer shall be 150 mm.

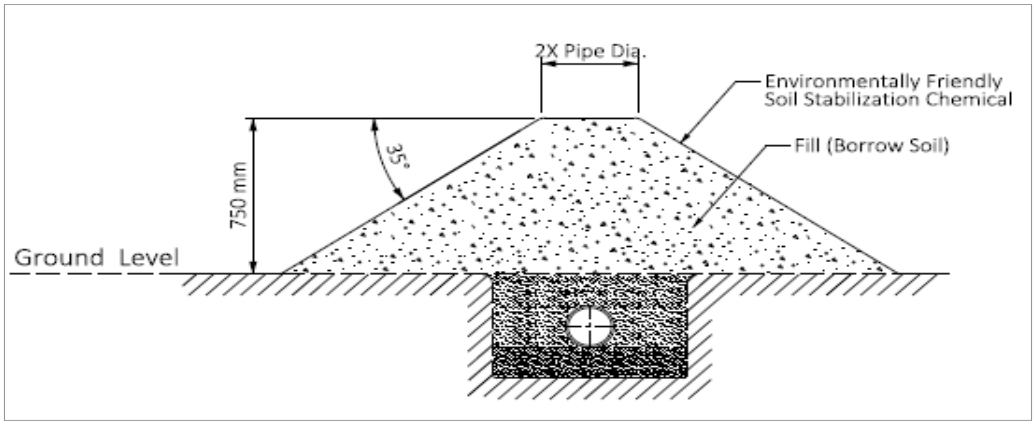

Figure 19: Berm with environmentally friendly soil stabilization chemical cover

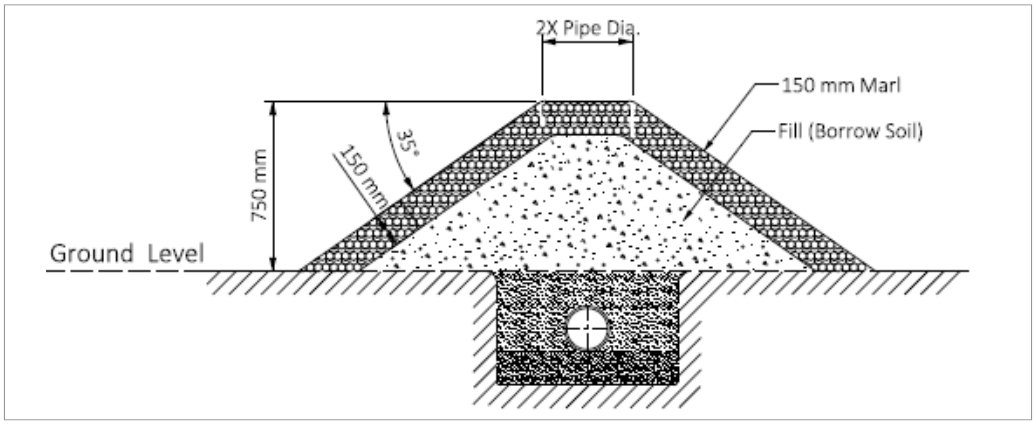

Figure 20: Berm with Marl cover

7.12 Underground to Aboveground Transition

The transition from the underground to aboveground should be done with proper care. It is recommended to use a riser chute to transition from a buried section to an aboveground connection. There are three configurations followed based on the project requirement (See Figure 19 to 21). The need of a special arrangement can be determined based on the difference in elevation between the buried piping and the aboveground piping. **A detailed project-specific drawing shall be made per diameter and pressure class during the execution phase**.

1) 45-degree transition

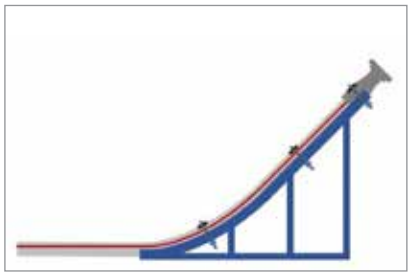

Figure 21: 45-degree transition

2) 90-degree transition

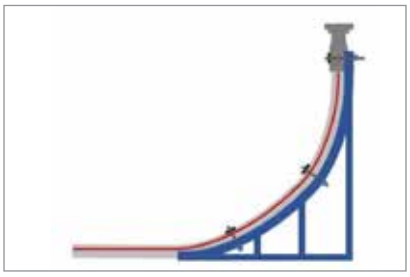

Figure 22: 90-degree transition

3) S-bend

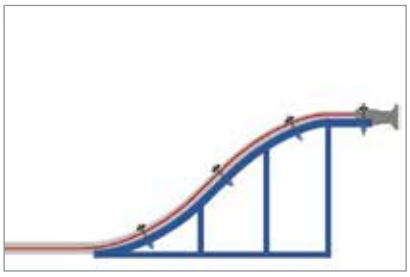

Figure 23: Transition using S-Bend

Riser Assembly

1. Install steel pilings foundation to an appropriate depth determined by project parameters and in line with riser chute design.
2. Keep a minimum of 1m pipe straight leading to the riser chute.
3. **The steel frame shall be extended until the horizontal soil plane**.
4. Place plastic protectors underneath the U-bolts to protect the pipe.
5. **Neoprene rubber shall be placed between the pipe and the steel frame**.
6. Protect the exposed pipeline to protect from excessive solar radiation.
7. Backfill the pipe after the installation is complete.

Note: *In occasions where the difference in elevation of the underground to aboveground transition is comparatively less, the Flexstrong™ pipes can be connected directly to the tie-in without any riser chutes. The actual requirement shall be studied on a case-by-case basis, and solutions shall be proposed, project-specific.*

8. JOINTING

Flexstrong™ has three types of fitting connections. Pipe-to-pipe coupling, flange-end connector, and weld-end connector. Pipe-to-pipe coupling is commonly used to join two lengths of line pipes, whereas flange-end and weld-end connectors are used for tie-in connections.

Pipe-to-Pipe Coupling

Flanged-End Connector

Weld End Connector

Figure 24: Types of Fittings

The fitting material is selected based on fluid compatibility and corrosion resistance. Stainless steel SS316 or SS304 is the standard material for fittings and is highly recommended for the best performance in most common corrosive environments. Although, fitting material can vary based on the product application and its end user requirement.

FPI offers two kinds of fitting process connections.
EXTERNAL Swaging Process - where the ferrule of the fitting is pushed through a die.
DUAL Process - done by expanding the internal stem of the fitting by pulling a dolly through it, then crimping the ferrule sleeve of the fitting.

For each process, FPI supplies the right kit containing the relevant tools and equipment for performing the intended process

8.1 External Swaging process

Swaging process of Flexstrong™ pipeline shall be carried out using FPI supplied swaging kit. The machinery, kit and pipe ends shall be visually inspected for any damage that could compromise the sealing integrity. The swaging equipment shall be assembled and operated by a certified and skilled operator.

The swaging machine will uniformly compress the outer jacket of the fitting resulting in a reliable, permanent connection attached to the pipe end. The ferrule of the fitting is swaged down to develop the clamping force that ensures fluid sealing and joint performance over the lifetime of the pipeline.

Prior to performing the swaging process, the components of swaging kit shall be inspected, the fuel tanks shall be filled with suitable gasoline, the engine oil level shall be checked and refilled with suitable engine oil (10W30) if needed, the hydraulic oil level shall be checked and refilled with the suitable hydraulic oil (HFO46) if needed, the hydraulic hoses and pressure gauges are properly connected. Ensure the swaging machine is installed in a level and firm surface. The detailed swaging process is described below with illustrations. Following the same procedure while doing the swaging outside and inside the trench.

Step 1: Properly cut the pipe for at least 1m (3 ft.) from the pulling device.

Step 2: Mark the Home line for insertion length.

Step 3: Insert the O-ring in the groove.

Step 4: Install the fitting on the proper Horseshoe holder.

.

Step 5: Install the proper swaging die, the steeper side facing opposite to the fitting.

Step 6: Lock the upper securing cover.

Step 7: Attach the insertion clamps.

Step 8: Apply Lithium Complex Grease on both sides of the pipe.

Step 9: Start the insertion process until reaching the Home line.

Step 10: Dismantle the insertion clamps.

Step 11: Apply Molykote on the outer surface of the fitting and on swaging dies.

Step 12: Start the swaging the process for the fitting in both directions back and forth.


Step 13. Finally, strip the jacket of the pipe, 100mm from the sleeve edge of the fitting.

8.2 Dual (Internal and External) Process

The Crimping process of Flexstrong™ pipeline shall be carried out using the FPI supplied Crimping kit. The machinery and pipe ends shall be visually inspected for any damage that could compromise the sealing integrity. The crimping equipment shall be assembled and operated by a certified and skilled operator.

The Dual process consists of expanding the stem of the fitting by pulling a dolly through it. Then crimping ferrule using the crimping machine to compress it towards the jacket of the pipe.

Prior to performing the crimping process, make sure that the electrical supply is connected and of the required capacity. Hydraulic oil levels shall be inspected and refilled if needed.

The detailed crimping process is described below with illustrations.

Step 1: Properly cut the pipe for at least 1m (3 ft) from the pulling device.

Step 2: Mark the Home line for insertion length.

Step 3: Install the fitting on the proper holding plate.

Step 4: Install the expansion die(dolly) and secure nut.

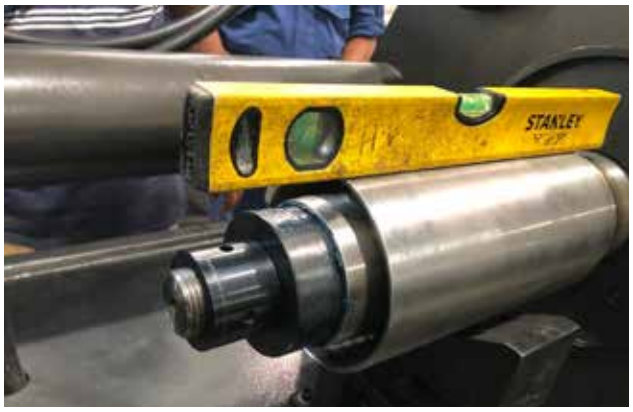

Step 5: Apply grease on the expanding die and fitting. Ensure the alignment of the fitting.

Step 6: install the pipe on clamps.

Step 7: Start the insertion process till reaching the Home line.

Step 8: Expanding the fitting using the expansion die.

Step 9: Check the crimping machine if it is function properly

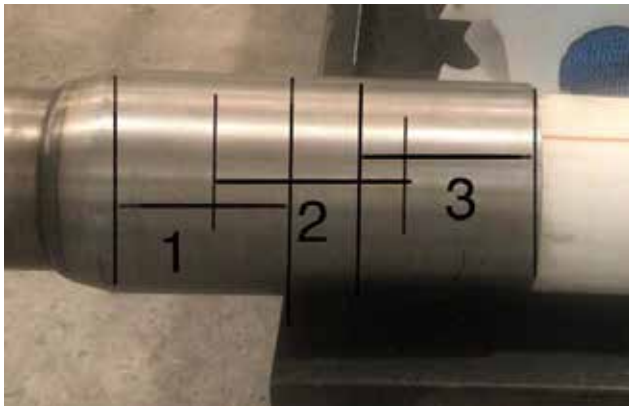

Step 10: Mark the fitting for crimping

Step 11: Install the crimping jaws according to the required size

Step 12: Check its functionality by moving inward and outwards

Step 13: Set the parameters" Close Die setting" according to pipe size

Step 14: Keep the machine on auto mode and operate to close manually to close the die for crimping

Step 15: Open the swaging blocks and check the OD after crimping on marked area # 1 with OD tape

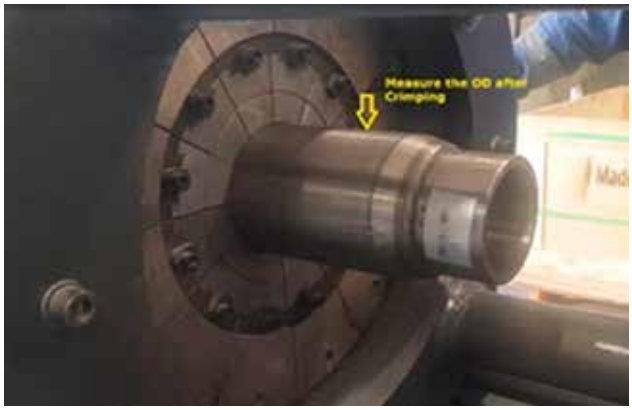

Step 16: Repeat the procedure by increasing gradually the parameter " close Die setting" until the required OD after crimping is achieved

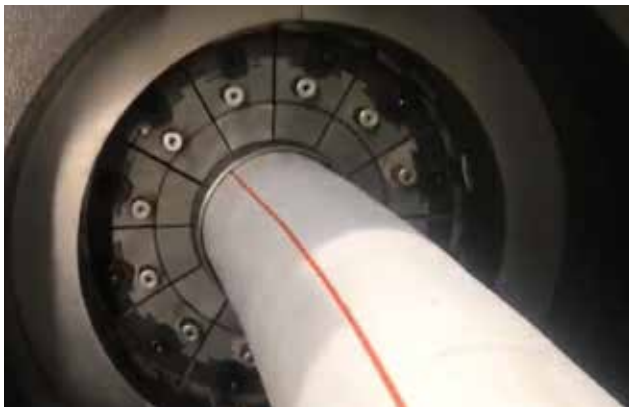

Step 17: Repeat the same procedure for the remaining marked areas(no. 3 and 2)

Step 18: Remove the Pipe along with crimped fitting carefully from the machine

Step 19: After the jointing process is completed, a dimensional check should be carried out to ensure the end fitting is compressed well into the pipe wall

Step 20: Finally, strip the jacket of the pipe, 100mm from the edge sleeve of the fitting

8.3 Additional Guidance While Doing Swaging and Crimping Jointing

1. Avoid curve/bend pipe to fitting
   1.1 Cut end should be perfectly square to prevent misaligning during insertion The detailed crimping process is described below with illustrations.

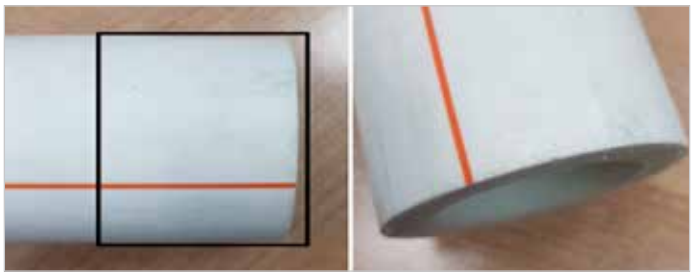

Figure 25: Square and acceptable cut

2. Apply protective paste (Denso Paste) to the cut end to protect the reinforcement structure from water, or contaminants.
3. Use the insertion clamps or crimping jaws that match the pipe size.
4. Use Pipe peeler only if the ID and OD do not conform to the required fitting dimension.
5. Ensure the swaged/crimped area is uniform, using the lever or measuring the OD after swaging/ crimping will be the best way to confirm it.

Remember:
Proper alignment of the pipe and connectors is critical for successful installation.

8.4 Corrosion Coating

Lastly, Protection of the metallic components used for the fittings and connection. The protective coating/wrapping (such as VISCOTAQ®, STOPAQ®, CANUSA or equivalent.) can be applied in line with supplier recommendations. Relevant supplier catalog shall be referred to for the right execution of the wrapping process. Use the wax-based paste on the **vent hole** and **stripped area** to prevent water going inside the fitting. Then wrap it with petrolatum tape to allow gas to escape. Afterward, cover it with some protective coating for additional prevention from UV.

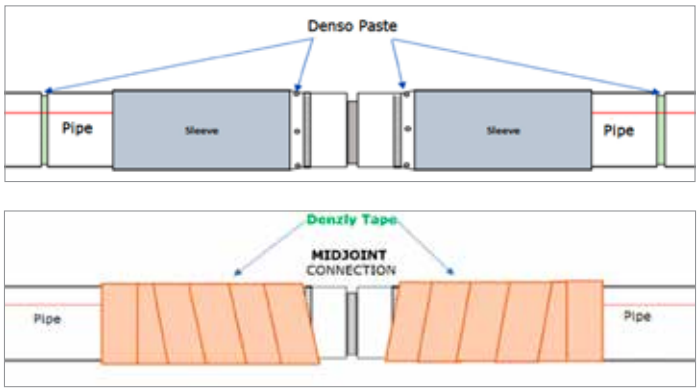

Figure 26: Pipe with petrolatum tape

Figure 27: Pipe with tape for UV protection

Note:
For Protection Coating

White Tape - For surface laid pipeline

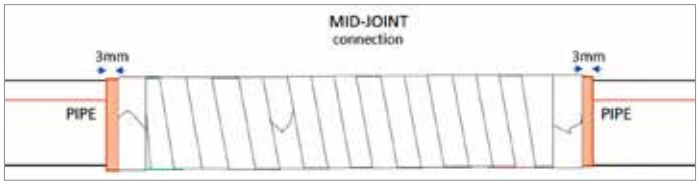

Black tape - For Buried pipeline

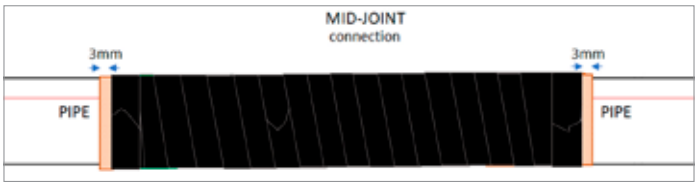

Reference: Visco-Elastic Coating procedure for TCP Fittings

9. FIELD TESTING

FField testing shall be conducted upon the completion of the pipeline installation to ensure the performance of the installed systems. The supervisors or inspectors shall ensure all other activities are completed before the pressure testing. Ensure all the requirements in the Inspection & Test Plan (ITP) are met and the non-conformities have been completed.

Complex piping systems should be broken into smaller runs for testing. As a minimum, lines shall be secured by backfill or sandbags before the hydrotesting. Surface laid pipelines shall also be secured against any movement with soil or sandbags as stated in clause 6.4. Project specific recommendations if any shall be implemented before the field-testing activity.

9.1 Cleaning and filling

The line shall be cleaned before the field testing. Cleaning, water filling, and dewatering can be done in two methods.

9.1.1 Cleaning, water filling, and dewatering

Following steps should be followed for the cleaning, water filling, and dewatering of short stretch pipelines.

Cleaning: Cleaning the pipeline can be done using compressed air from one end to the other to remove the dust or debris. Also flushing water from one end can clean the line from impurities and external contamination.

Waterfilling: This can be done by pumping the test medium from one end to the other by ensuring no entrapped air in the test section.

Dewatering: Dewatering after the testing can be done either by draining the line by gravity flow or using compressed air to expel the water from one end to the other. Dewatering should be done from the upstream end to the downstream end due to practical feasibility.

9.1.2 Cleaning, water filling and dewatering by pigging

For longer stretch pipelines, Medium-density foam pigs can be used for cleaning, water filling and de-watering processes. As normal cleaning, watering, and dewatering is not practical at all.

Cleaning: Pigs shall be propelled by compressed air at a maximum pressure of 7 bar. A 10bar pressure gauge shall be installed at the launcher. The pressure set up on the piping shall be fitted with a pressure relief valve set at 7bar. To assist and control the speed of the cleaning pig, a constant back pressure of 2bar shall be maintained by suitable adjustment. The speed of the cleaning pig shall be maintained between 0.2 to 0.8m/s.

Pigging shall continue until the volume of the received material is less than 5 liters and further pigging will not result in a significant reduction in the material received.

Waterfilling: Pigging might be required to fill the line without air entrapment for the long stretch pipelines and in special cases where a bigger elevation difference exists. The process shall be the same as explained in the cleaning process above.

De-Watering: If the line needs to be dewatered after the testing pigs can be used in the same manner as detailed in the cleaning.

Figure 28: Medium-density Foam Pig

Note:
1) Care shall be taken to ensure the line is pigable and the pig will not be stuck in the line during the process.
2) Cleaning, Water filling, Dewatering, etc. can be done either partially or fully depending on the site condition.
3) The standard method of cleaning, watering, and dewatering is not recommended if the line cannot be filled with a test medium without any air entrapment.

9.2 Pressurization.

The test section shall be pressurized as detailed below.

- The pressure gauges are installed at the lowest and highest points in the pipeline. A minimum of two pressure gauges is required for testing the system.
- The pipeline should be pressurized up to 60% of the test pressure with a rate of 6.9 Bar per minute (100 psi per minute).
- Conditioning pressure should be held until the pressure stabilizes for a minimum duration of 30 minutes. It is normal to observe some slight decrease in the conditioning pressure over this holding time.
- During the holding time, the line should be inspected for leaks, particularly at end connections.
- Once the conditioning pressure stabilizes, the pressure should be increased with a rate of 6.9 Bar per minute (100 psi per minute) till 8-10% above the Hydrostatic Test Pressure for stabilization.
- It is expected to observe some slight decrease in the pressure over this stabilization process. Hence, the pressure should be increased two more times up to 8-10% above the Hydrostatic Test Pressure.
- After increasing the pressure two times, the pipeline should be left for a stabilization time of 8 hours.
- During the stabilization time, the line should be inspected for leaks, particularly at end connections.
- After the stabilization time, the pipeline should be pressurized once more up to 8-10% above the Hydrostatic Test Pressure. This marks the beginning of the 4-hour test period.
- If there is an indication of a leak, stop the test, bleed-off the pressure, and repair the line. After repairing the leak, refill the pipeline with the hydrotest fluid and restart the testing procedure.
- Upon successful completion of hydrostatic testing, the line should be depressurized with a rate of 6.9 Bar per minute (100 psi per minute).

Table 3: Hydrostatic Testing Details

Conditioning Pressure	Conditioning Duration	Nominal Test Pressure	Additional Pressure	Pressurization / Depressurization rate	Stabilization Time	Test Duration
60 % of TP	30 Min.	1.25 x MAOP	108-110 % of TP	6.9 Bar / Min.	8 Hours	4 Hours

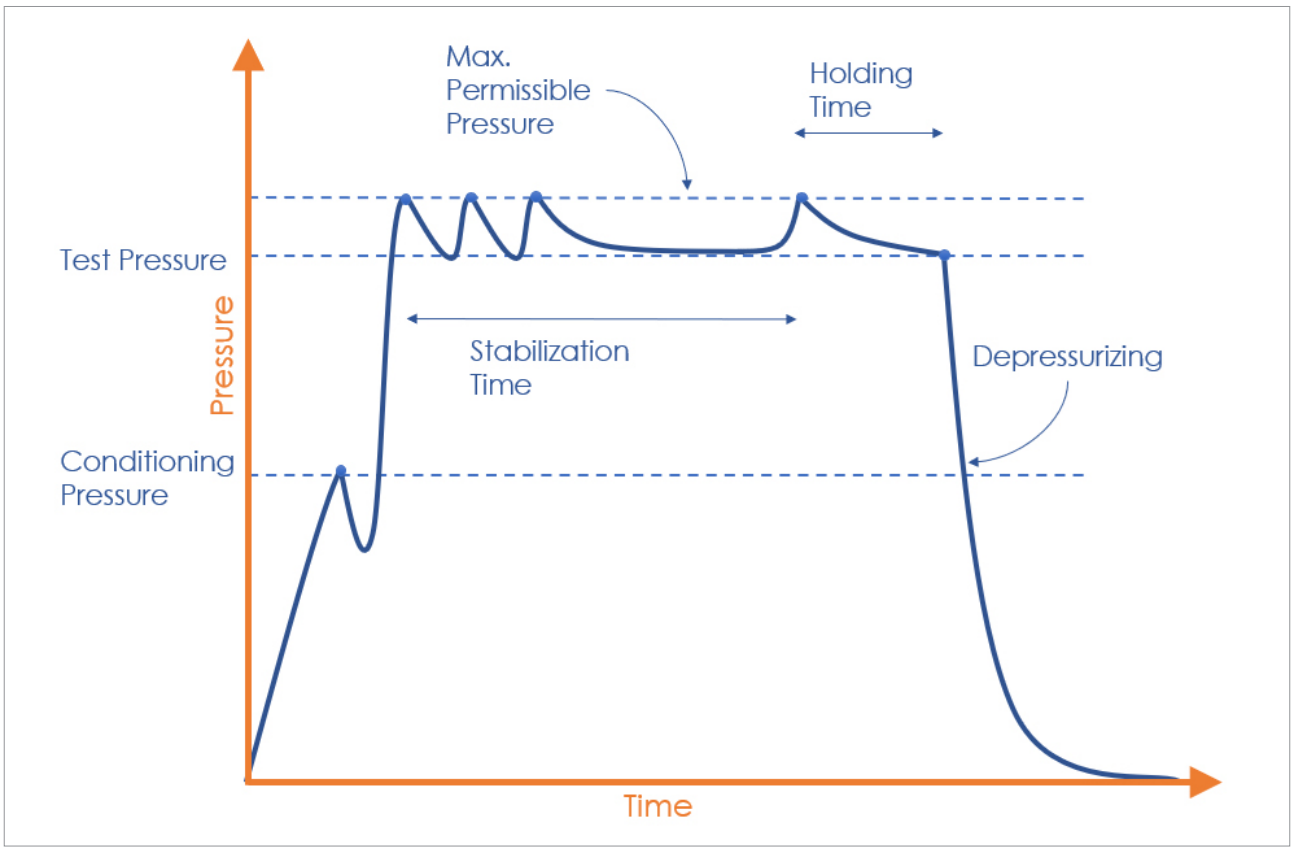

Figure 22: Hydrostatic Testing Details

Note: *The maximum test pressure shall not exceed 125% of the pressure class.*

10. SHUTDOWN PROCEDURES

For any gas / multiphase application, it is recommended to conduct a gradual depressurization on the pipeline. Gradual depressurization reduces the chance of liner collapse. It allows sufficient time for any gas that has permeated through the pipe wall to escape to the atmosphere. The rate of depressurization should not be more than 100 PSI per hour. Once a pressure of 50 - 75 PSI is reached, hold for 24 hours before the final depressurization.

11. HSE REQUIREMENTS

The site HSE manager monitors the work to ensure compliance with safety regulations at site.